Block FIR Decision-Feedback Equalizers for Filterbank Precoded Transmissions with Blind Channel Estimation Capabilities

Anastasios Stamoulis, Georgios B. Giannakis, *Fellow, IEEE*, and Anna Scaglione, *Member, IEEE*

***Abstract*—In block transmission systems, transmitter-induced redundancy using finite-impulse response (FIR) filterbanks can be used to suppress intersymbol interference and equalize FIR channels irrespective of channel zeros. At the receiver end, linear or decision-feedback (DF) FIR filterbanks can be applied to recover the transmitted data. Closed-form expressions are derived for the FIR linear or DF filterbank receivers corresponding to varying amounts of transmission redundancy. Our framework encompasses existing block transmission schemes and offers low implementation-cost equalization techniques both when interblock interference is eliminated, and when IBI is present as, e.g., in orthogonal frequency-division multiplexing with insufficient cyclic prefix. By applying blind channel estimation methods, our filterbank transmitters–receivers (transceivers) dispense with bandwidth consuming training sequences. Extensive simulations illustrate the merits of our designs.**

***Index Terms*—Estimation, decision-feedback equalizer, FIR digital filters.**

I. Introduction

RANSMISSION precoding is proposed in this paper along with decision-feedback equalization (DFE) in order to suppress intersymbol interference (ISI) in block transmission systems. Equalization targets such "structured" ISI-induced errors that are caused by multipath-induced frequency-selective channels. If the (presumed linear and time-invariant) channel is known, then its structured, deterministic effect on the transmitted signal can be removed (or significantly reduced) by properly designed equalizers at the receiver end. On the other hand, channel coding techniques (e.g., convolutional codes) are effective for "unstructured" (noise-like) symbol errors. As a result, even when the channel cannot be completely equalized, or when the noise cannot be suppressed (as with zero-forcing equalization of a channel with nulls close to the unit circle), channel coding lowers (but does not remove) the error floor in the bit-error rate (BER) performance at the expense of introducing redundancy.

To combat fading effects in frequency-selective channels, the transmitter does not have only channel coding at its disposal. Redundant block transmission systems such as orthogonal frequency-division multiplexing (OFDM) rely on inverse fast Fourier transform precoding to cope with ISI. Among the ways to model block transmission of data is the unifying framework of [10] that enables most of the currently used block transmission systems to be realized using pairs of filterbank transmitters and receivers (transceivers). By introducing very modest redundancy relative to channel coding, transmitter precoding also enables blind channel estimation and block synchronization [11]. The redundancy is in the form of cyclic prefix or zero padding (which acts as "guard interval") and offers degrees of freedom that can be exploited when designing transceivers under BER and information rate (throughput) constraints.

However, BER performance of the equalization process depends critically upon the receiver structure. Serial decision-feedback (DF) receivers have been shown to exhibit superior BER performance (when compared to linear receivers) and have the potential to achieve (under certain conditions) the performance of the maximum-likelihood receiver (see, e.g., [1] and [18] for details). Moreover, with adaptive DFE techniques, the DFE receiver structure lends itself naturally to decision-directed channel estimation [8, pp. 649–650], [9]. Blind DFE channel estimation methods have been also proposed (see [16] and references therein).

As their name suggests, *serial* DF receivers apply the same filters to every received symbol. Though serial DF receivers can be used in block transmission systems, they do not fully exploit the structure of the received blocks. On the other hand, *block* DF receivers apply different filters to symbols of the received block and can result in improved BER performance. Unlike serial zero-forcing (ZF) DF receivers, which entail infinite-impulse response (IIR) feedforward and feedback structures, we show in this work that block ZF-DF receivers are given by closed-form expressions, which can be implemented exactly using finite-impulse response (FIR) filterbanks. Consequently, block DF receivers outperform serial DF receivers as we illustrate in the simulations section.

Block transmission systems with proper selection of transmit-redundancy to obviate interblock interference (IBI), and ZF or minimum-mean-square-error (MMSE) block DF receivers have appeared in [6]. Acknowledging that proper selection of the transmitter precoder can result in improved performance [10], [14], in this work, we extend the results of [6] and develop closed-form FIR DF filterbanks by taking into account the transmitter precoder, the (perhaps unknown) channel response, the autocorrelation of the finite-alphabet

Paper approved by R. A. Kennedy, the Editor for Data Communications, Modulation and Signal Design of the IEEE Communications Society. Manuscript received January 15, 1999; revised November 1, 1999 and May 29, 2000. This paper was presented in part at the Workshop on Signal Processing Advances in Wireless Communications, Annapolis, MD, May 1999.

The authors are with Department of Electrical and Computer Engineering, University of Minnesota, Minneapolis, MN 55455 USA (e-mail: stamouli@ece.umn.edu; georgios@ece.umn.edu; anna@ece.umn.edu).

Publisher Item Identifier S 0090-6778(01)00264-1.

0090–6778/01$10.00 © 2001 IEEE

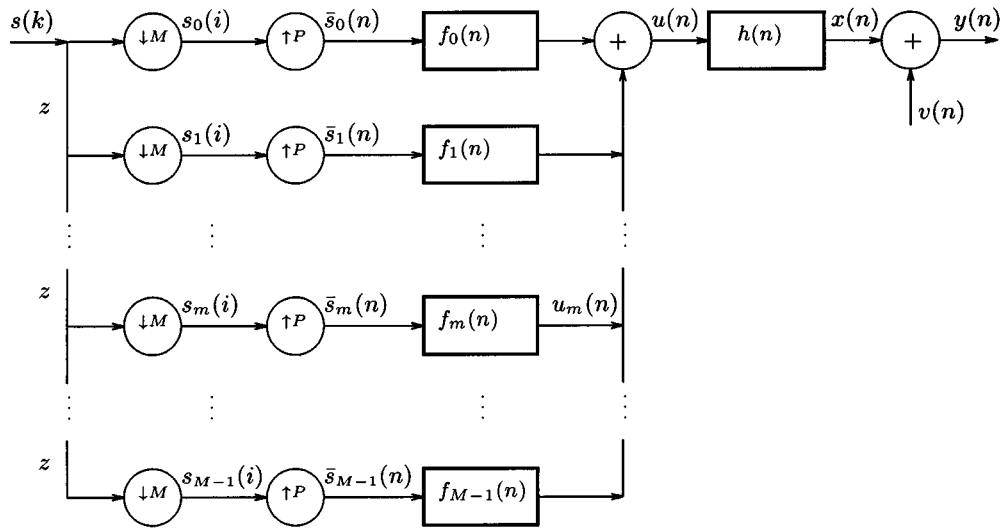

Fig. 1. Transmit filterbank.

data, and the additive noise. Moreover, we derive closed-form FIR block DF receivers that exist even when IBI is present, which occurs with, e.g., OFDM transmissions with cyclic prefix shorter than the channel response (see, e.g., [15]). Unlike [4], where transceivers are expressed in the z-domain and receiver filters are IIR, our block FIR DF receivers can be realized exactly and outperform the hybrid block/serial DF receiver structures of [15] proposed recently for OFDM transmissions.

Note that in our DF framework, the decision device produces only one symbol estimate at a time. This in contrast to the block DF framework of [18], where the decision device can be tuned to collect a block of received symbols, produces symbol estimates for the corresponding transmitted symbols, and asymptotically achieves the performance of the maximum-likelihood receiver. In this paper, we do not make any claims with respect to the asymptotic performance of our block DF receivers, but we show that our closed-form block DF receivers guarantee exact FIR equalization irrespective of the channel, and result in significant BER improvements, while requiring low implementation cost.

Although the main focus of our paper is to derive closed-form block DF receivers, we also exploit the inherent redundancy of block transmission systems to equip block DF receivers with blind channel estimation capabilities. Different from [4] and [6] where the channel is assumed to be known at the receiver, we illustrate herein that transmitter redundancy can be used for channel impulse response (CIR) acquisition. Hence, the transmitted redundancy does not only improve BER performance (as we show later on) but also can dispense with bandwidth consuming training sequences.

In Section II, we describe our transceiver model and lay out the framework on which the rest of the paper is built upon. In Section III, we derive closed-form solutions for ZF and MMSE linear and nonlinear FIR receivers when IBI is eliminated through the use of transmitter-induced redundancy; in Section IV, we address the case where minimum redundancy causes IBI to be present. In Section V, we describe how transmit-redundancy can be used for blind channel estimation, and in Section VI, we study the performance of our transceivers via extensive simulations. We summarize and give pointers to future research in Section VII.

Notation: Column vectors are denoted by boldface lowercase letters; matrices are denoted by boldface capital letters. For an $M \times P$ matrix $\mathbf{A}$, its dimensions are denoted by $\mathbf{A}_{M\times P}$. The superscripts T, $\mathcal{H}$ stand for the transpose and complex conjugate transpose, respectively. The pseudoinverse is denoted by $\dagger$, $\mathbf{I}$ ($\mathbf{0}$) denotes the identity (all-zeros) matrix, $\mathrm{diag}(d_1, d_1, \ldots, d_M)$ denotes an $M \times M$ diagonal matrix with diagonal entries $d_1, d_1, \ldots, d_M$, $\otimes$ denotes Kronecker product, $\lceil\cdot\rceil$ denotes the ceiling-integer, and $\lfloor\cdot\rfloor$ denotes the floor-integer. In our model, signals are sampled either at the symbol rate or at the chip rate; the distinction is made using different indices. For example, for the signal $s(\cdot)$, $s(k)$ denotes the kth sample taken at the symbol rate, whereas for the signal $u(\cdot)$, $u(n)$ denotes the nth sample taken at the chip rate. For blocks of samples we use the index i, e.g., $\mathbf{s}(i)$ denotes the ith block of samples.

II. Model Description

In this section we describe the discrete-time block transmission equivalent model of a baseband communication system. The channel $h(n)$ is modeled as FIR linear time invariant (LTI) of order L: $h(n) = 0$, $n \notin [0, L]$. Fig. 1 depicts the transmitter, which is an all-digital filterbank consisting of advance elements, downsamplers, upsamplers, and M FIR filters $\{f_m(n)\}_{m=0}^{M-1}$ of order $P-1$. The advance elements and downsamplers parse the input symbols $s(k)$ into M-long blocks, with $M < P$. The mth symbol of the ith block is denoted by $s_m(i) := s(iM + m)$, $0 \le m \le M-1$, and is generated at the output of the mth downsampler. With the insertion of $P-1$ zeros at the mth upsampler, the corresponding upsampler's output is

$$\bar{s}_m(n) := \begin{cases} 0, & n \bmod P \neq 0 \\ s_m(n/P), & n \bmod P = 0 \end{cases}$$

where n is the chip index. The output of the mth transmit filter is

$$u_m(n) = s_m(\lfloor n/P \rfloor)\, f_m(n \bmod P)$$

and the transmitted sequence is[1]

$$u(n) = \sum_{m=0}^{M-1} s(\lfloor n/P \rfloor M + m)\, f_m(n \bmod P). \tag{1}$$

The received $y(n)$ consists of the noise-free data $x(n)$ plus additive zero-mean stationary noise $v(n)$

$$\begin{aligned} y(n) &= x(n) + v(n) = \sum_{l=0}^{L} h(l) u(n-l) + v(n) \\ &= \sum_{l=0}^{L} h(l) \sum_{m=0}^{M-1} s(\lfloor (n-l)/P \rfloor M + m) \\ &\quad \cdot f_m((n-l) \bmod P) + v(n). \end{aligned} \tag{2}$$

Although (1) and (2) result in a rather cumbersome input/output relationship, they can be expressed compactly in a matrix form. Let $\mathbf{s}(i) := (s(iM)s(iM+1)\cdots s(iM+(M-1)))^T$ be the $M \times 1$ vector denoting the ith block of input data. Then, by denoting the corresponding transmitted P-long block $\mathbf{u}(i)$ as $\mathbf{u}(i) := (u(iP)u(iP+1)\cdots u(iP+(P-1)))^T$, the vector form of (1) is

$$\mathbf{u}(i) = \mathbf{F}\mathbf{s}(i) \tag{3}$$

where the elements of the $P \times M$ matrix $\mathbf{F}$ are

$$[\mathbf{F}]_{p,m} := f_m(p),\ p = 0, \ldots, P-1,\ m = 0, \ldots, M-1. \tag{4}$$

Denote by $\mathbf{x}(i)$, $\mathbf{y}(i)$, and $\mathbf{v}(i)$ the $P \times 1$ vectors $\mathbf{x}(i) := (x(iP)x(iP+1)\cdots x(iP+(P-1)))^T$, $\mathbf{y}(i) := (y(iP)y(iP+1)\cdots y(iP+(P-1)))^T$, and $\mathbf{v}(i) := (v(iP)v(iP+1)\cdots v(iP+(P-1)))^T$, respectively. Selecting the transmitted block length: $P > L$, the vector form of (2) is

$$\begin{aligned} \mathbf{y}(i) &= \mathbf{x}(i) + \mathbf{v}(i) \\ &= \mathbf{H}_0\mathbf{u}(i) + \mathbf{H}_1\mathbf{u}(i-1) + \mathbf{v}(i) \\ &= \mathbf{H}_0\mathbf{F}\mathbf{s}(i) + \mathbf{H}_1\mathbf{F}\mathbf{s}(i-1) + \mathbf{v}(i) \end{aligned} \tag{5}$$

where the $P \times P$ Toeplitz channel matrices $\mathbf{H}_0$, $\mathbf{H}_1$ are defined as

$$\begin{aligned} [\mathbf{H}_0]_{p_1,p_2} &:= h(p_1 - p_2), \qquad p_1, p_2 \in [0, P-1] \\ [\mathbf{H}_1]_{p_1,p_2} &:= h(P + p_1 - p_2), \qquad p_1, p_2 \in [0, P-1]. \end{aligned} \tag{6}$$

As (5) indicates, the matrix $\mathbf{H}_0$ models the ISI within the symbols of a block, whereas the matrix $\mathbf{H}_1$ models IBI from one block to the one which follows it.

A number of single and multiuser modulation schemes can be modeled using the framework of (3) and (5) [10]. For example, OFDM is obtained by setting the entries of $\mathbf{F}$ as $[\mathbf{F}]_{p,m} = \exp\{j(2\pi/M)mp\}$, TDMA (time-division multiplexing) corresponds to $\mathbf{F} = [\mathbf{I}_M \quad \mathbf{0}_{M\times(P-M)}]^T$, and downlink CDMA (code-division multiplexing) is obtained when one selects as columns of the precoder matrix the user codes. Our block transmission DFE framework is thus applicable to perhaps asynchronous (when IBI is present) multiuser downlink transmissions (see also [5], and [17, pp. 382–384] for DFE-CDMA transceivers in the absence of possibly unknown frequency-selective multipath).

The redundancy per transmitted block is measured by the ratio $(P-M)/P$, while at the receiver the rate is reduced by the same amount restoring the original data rate. Transmit-redundancy offers degrees of freedom that one can exploit to improve system performance. Specifically, it will turn out in Section III that IBI can be removed by proper selection of the block size P; in Section V, transmit-redundancy will be used for blind channel estimation and thus blind DFE development.

We conclude this section with a summary of symbols used throughout the paper.

- M: source data block size; P: transmitted and received block size; L: FIR channel order.
- $\mathbf{s}(i)$: input data block; $\mathbf{u}(i)$: transmitted data block; $\mathbf{x}(i)$: noise-free received data block; $\mathbf{y}(i)$: received data block.
- $\mathbf{F}$ is used for precoder matrices, $\mathbf{H}$ is used for the channel matrices.
- $\mathbf{G}$ denotes the linear equalizer matrix; $(\mathbf{B}, \mathbf{W})$ denotes the (feedforward, feedback) filters of the DFE receiver (these symbols are defined in Sections III and IV).

III. Filterbank Receivers with no IBI

One of the basic motivations for using block transmissions is that ISI can be eliminated completely using block FIR receivers. The latter can be accomplished in two steps: first by eliminating IBI, and second by eliminating ISI within the symbols of a transmitted block.

From (5) we observe that the matrix $\mathbf{H}_1$ models IBI from the next to the current block. The first L elements of the ith received block $\mathbf{x}(i)$ are affected by the last L elements of the $(i-1)$th transmitted block $\mathbf{u}(i-1)$; as a result, only the $L \times L$ top right submatrix of $\mathbf{H}_1$ is nonzero. Therefore, to eliminate IBI it suffices to force the bottom $L \times M$ submatrix of $\mathbf{F}$ to zeros, which suggests a precoder matrix

$$\mathbf{F} = \begin{pmatrix} \overline{\mathbf{F}}_{(P-L)\times M} \\ \mathbf{0}_{L\times M} \end{pmatrix}. \tag{7}$$

As (7) suggests, the number of symbols contained in a transmitted block of length P is $P-L$. Then, if we want to transmit M input symbols, we need $M \le P-L$, which leads to selecting $P = M+L$ as the minimum block length which eliminates IBI. With $P = M+L$, the received data model in (5) simplifies to

$$\mathbf{y}(i) = \mathbf{H}_0\mathbf{F}\mathbf{s}(i) + \mathbf{v}(i). \tag{8}$$

We also remark at this point that (7) amounts to padding L zeros (or "guard chips") at the end of each transmitted block. As it will be explained in Section V, these trailing zeros can also be used for blind channel estimation. For the time being, we proceed to describe how to design the linear and nonlinear DFE filterbanks, under the assumption that CIR is available at the receiver.

A. Linear and Nonlinear ZF Receivers

It was proved in [10] that for a given full-rank precoding matrix $\mathbf{F}$ and a channel matrix $\mathbf{H}_0$ (which is Toeplitz and full-rank by construction), there exists a ZF equalizing filterbank $\mathbf{G}$ so that $\mathbf{G}\mathbf{x}(i) = \mathbf{s}(i)$. The minimum norm ZF filterbank is unique and it is given by $\mathbf{G} = (\mathbf{H}_0\mathbf{F})^\dagger$ [10]. The equalized blocks are given by

$$\hat{\mathbf{s}}(i) = \mathbf{G}\mathbf{H}_0\mathbf{F}\mathbf{s}(i) + \mathbf{G}\mathbf{v}(i) \tag{9}$$

[1]We assume continuous-time Nyquist transmit/receive filters and include their effect in the discrete-time equivalent channel $h(l)$.

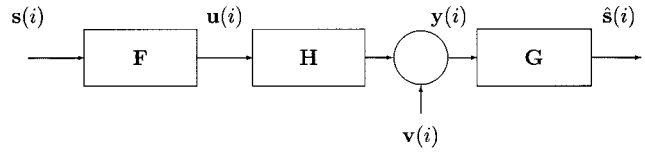

Fig. 2. Linear filterbank transceivers.

where $\hat{\mathbf{s}}(i) := (\hat{s}(iM)\hat{s}(iM+1)\cdots\hat{s}(iM+(M-1)))^T$. The structure of the linear filterbank receiver is illustrated in Fig. 2. It consists of P FIR filters $\{g_p(m)\}_{p=0}^{P-1}$ each of length M, with coefficients given by the entries of $\mathbf{G}$

$$g_p(m) := [\mathbf{G}]_{m,p}, \qquad p = 0, \ldots, P-1; \quad m = 0, \ldots, M-1. \tag{10}$$

At high signal-to-noise ratios (SNRs), the linear ZF equalizer is expected to equalize the channel perfectly. However, BER performance can be improved (especially at low SNR) in two ways. First, by exploiting the finite alphabet of the input and taking into account decisions about the symbols in the same block. Second, by whitening the noise at the input of the decision device. It follows from (9), that the covariance matrix of $\boldsymbol{\eta}(i) := \mathbf{G}\mathbf{v}(i)$ is: $\mathbf{R}_{\eta\eta} := E\{\mathbf{G}\mathbf{v}(i)(\mathbf{G}\mathbf{v}(i))^{\mathcal{H}}\} = \mathbf{G}\mathbf{R}_{vv}\mathbf{G}^{\mathcal{H}}$, where $\mathbf{R}_{vv} := E\{\mathbf{v}(i)\mathbf{v}^{\mathcal{H}}(i)\}$; hence, in general the noise at the input of the decision device is not white. Noise whitening can be accomplished by properly selecting $\mathbf{F}$ and $\mathbf{G}$ when CIR is also available at the transmitter [10]. When CIR is unavailable at the transmitter, both noise whitening and exploitation of finite alphabet/past decisions can be realized through our block ZF-DFE that we develop next.

Fig. 3 depicts the structure of the DF receiver. The decision-feedback equalizer consists of the feedforward filterbank represented by the $M \times P$ matrix $\mathbf{W}$, the decision making device and the feedback filterbank represented by the $M \times M$ matrix $\mathbf{B}$. The feedforward filter is responsible for eliminating ISI from "future" symbols within the current block, whereas the feedback filter is responsible for eliminating ISI from "past" symbols. Now we look at how we can derive the settings for the ZF-DFE by taking into account the known structure of the precoder $\mathbf{F}$ and the channel $\mathbf{H}_0$.

Let us define the $M \times 1$ vectors: $\mathbf{z}(i) := (z(iM)z(iM+1)\cdots z(iM+M-1))^T$, and $\tilde{\mathbf{s}}(i) := (\tilde{s}(iM)\tilde{s}(iM+1)\cdots\tilde{s}(iM+M-1))^T$ Based on (8) and (9) and by inspecting Fig. 3, we obtain

$$\mathbf{z}(i) = \mathbf{W}\mathbf{y}(i) = \mathbf{W}\mathbf{H}_0\mathbf{F}\mathbf{s}(i) + \mathbf{W}\mathbf{v}(i) \tag{11a}$$
$$\tilde{\mathbf{s}}(i) = \mathbf{z}(i) - \mathbf{B}\hat{\mathbf{s}}(i) \tag{11b}$$
$$\hat{\mathbf{s}}(i) = Q(\tilde{\mathbf{s}}(i)) \tag{11c}$$

where $Q(\cdot)$ is the quantizer used by the decision device.

We design our ZF-DF receiver so that it satisfies the following three requirements.

1) Zero-forcing: By zero-forcing we mean that in the absence of noise and under the assumption of correct past decisions, the decision statistic should be equal to the transmitted data: $\tilde{\mathbf{s}}(i) = \mathbf{s}(i) = \hat{\mathbf{s}}(i)$. In view of (11a) and (11b), the latter translates the ZF requirement to

$$\mathbf{W}\mathbf{H}_0\mathbf{F} = \mathbf{B} + \mathbf{I}_{M\times M}. \tag{12}$$

2) Noise-whitening: Because past decisions are assumed correct, the noise at the input of the decision device is $\mathbf{W}\mathbf{v}(i)$, and in order to whiten it we select $\mathbf{W}$ such that

$$\mathbf{W}\mathbf{R}_{vv}\mathbf{W}^{\mathcal{H}} = \mathbf{D}_M \tag{13}$$

where $\mathbf{D}_M$ is an $M \times M$ diagonal matrix.

3) Successive-cancellation: By successive cancellation we mean that for every block indexed by i, the $(M-1)$th symbol is recovered first; then the estimate $\hat{s}(iM+M-1)$ is weighted by the last column of $\mathbf{B}$ and is removed from $\mathbf{z}(i)$ so that the remaining symbols can be recovered. The $(M-2)$nd symbol is recovered next, and the estimate $\hat{s}(iM+M-2)$ is removed from $\mathbf{z}(i)$. This procedure is carried out until all the symbols of the current block i have been estimated. Successive cancellation is made possible by selecting the feedback matrix $\mathbf{B}$ to be strictly upper triangular.

In the case of white noise ($\mathbf{R}_{vv} = \mathbf{I}_{P\times P}$), solving (12) for $\mathbf{W}$, and substituting the result to (13) we find: $(\mathbf{H}_0\mathbf{F})^{\mathcal{H}}(\mathbf{H}_0\mathbf{F}) = (\mathbf{B} + \mathbf{I}_{M\times M})^{\mathcal{H}}\mathbf{D}_M(\mathbf{B} + \mathbf{I}_{M\times M})$. As $\mathbf{B}$ should be strictly upper triangular, the matrix $\mathbf{B} + \mathbf{I}_{M\times M}$ should be upper triangular with unit diagonal. Consider now the Cholesky factorization of the *strictly positive definite* matrix $(\mathbf{H}_0\mathbf{F})^{\mathcal{H}}(\mathbf{H}_0\mathbf{F}) = \mathbf{U}^{\mathcal{H}}\mathbf{D}\mathbf{U}$, where $\mathbf{U}$ is upper triangular with unit diagonal. We select $\mathbf{B} + \mathbf{I}_{M\times M} = \mathbf{U}$, and hence

$$\mathbf{B} = \mathbf{U} - \mathbf{I}_{M\times M} \qquad \mathbf{W} = \mathbf{D}^{-1}\mathbf{U}^{-\mathcal{H}}(\mathbf{H}_0\mathbf{F})^{\mathcal{H}}. \tag{14}$$

Then it can be readily verified that $\mathbf{W}\mathbf{W}^{\mathcal{H}} = \mathbf{D}^{-1}$, which whitens the noise at the input of the decision device. In the case of colored noise, the feedforward filter needs to whiten the noise at the receiver by taking into account the autocorrelation $\mathbf{R}_{vv}$. Under the assumption that $\mathbf{R}_{vv}$ is full rank, (14) becomes

$$\mathbf{B} = \mathbf{U} - \mathbf{I}_{M\times M} \qquad \mathbf{W} = \mathbf{D}^{-1}\mathbf{U}^{-\mathcal{H}}(\mathbf{H}_0\mathbf{F})^{\mathcal{H}}\mathbf{R}_{vv}^{-1} \tag{15}$$

where $\mathbf{U}$ is upper triangular with unit diagonal, and is given by the Cholesky factorization of the *strictly positive definite* matrix $(\mathbf{H}_0\mathbf{F})^{\mathcal{H}}\mathbf{R}_{vv}^{-1}(\mathbf{H}_0\mathbf{F}) = \mathbf{U}^{\mathcal{H}}\mathbf{D}\mathbf{U}$.

In white noise, the matrix $(\mathbf{H}_0\mathbf{F})^{\mathcal{H}}(\mathbf{H}_0\mathbf{F})$ is guaranteed to be positive definite because $\mathbf{H}_0$ is lower triangular Toeplitz (and thus always full rank), and $\mathbf{F}$ is selected to be full rank by our design in (7). Although the feedforward and feedback matrices in (14) are reminiscent of the "whitened matched filter" DFE pair (see, e.g., [17, p. 59]), existing serial and block DFE matrices guarantee that $\mathbf{U}^{\mathcal{H}}\mathbf{U}$ is only positive semi-definite. Unlike zero padding, transmissions with cyclic prefix render $(\mathbf{H}_0\mathbf{F})^{\mathcal{H}}(\mathbf{H}_0\mathbf{F})$ circulant and thus rank deficient (or ill-posed), when the underlying FIR channel transfer function has zeros on the unit circle (or close to it). Our design in (7) assures positive-definiteness and is precisely why it satisfies perfectly the ZF property regardless of the channel nulls with the block FIR DFE settings of (15).

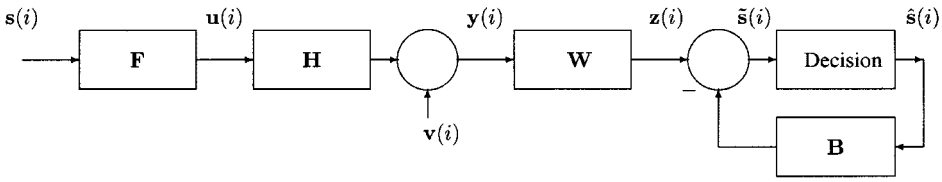

Fig. 3. Block transmitter, channel, and DFE receiver.

Finally, we remark that the feedforward (feedback) filterbank consists of P (M) FIR filters $\{w_p(m)\}_{p=0}^{P-1}$ ($\{b_m(n)\}_{m=0}^{M-1}$) of length M (M). The coefficients of the filters are given by the entries of $\mathbf{W}$ and $\mathbf{B}$, respectively, as

$$\begin{aligned} w_p(m) &:= [\mathbf{W}]_{m,p}, \qquad p = 0, \ldots, P-1; \\ &\qquad m = 0, \ldots, M-1 \\ b_m(n) &:= [\mathbf{B}]_{m,n}, \qquad m = 0, \ldots, M-1; \\ &\qquad n = 0, \ldots, M-1. \end{aligned} \tag{16}$$

Though at high SNR (ideally infinite) the ZF receiver is expected to equalize perfectly the channel, at low SNR a Wiener equalizer can lead to improved BER performance, because it takes into account the noise component present in the received data. This motivates looking into block MMSE filterbank receivers.

B. Linear and Nonlinear MMSE Receivers

Our block Wiener equalizer minimizes the mean square error (MSE) $E\{|\hat{\mathbf{s}}(i) - \mathbf{s}(i)|_2^2\}$. In the ensuing discussion we design a block linear and a nonlinear (DFE) receiver so that the MSE is minimized. We assume that the channel matrix $\mathbf{H}_0$, the precoder $\mathbf{F}$, and the correlation matrices $\mathbf{R}_{ss}$, $\mathbf{R}_{vv}$ are known.

1) Linear MMSE Receiver: The MSE can be written as a function of the receive matrix $\mathbf{G}$ as: $J(\mathbf{G}) := E\{|\hat{\mathbf{s}}(i) - \mathbf{s}(i)|^2\} = E\{\mathrm{tr}[(\mathbf{G}\mathbf{H}_0\mathbf{F} - \mathbf{I})\mathbf{s}(i) + \mathbf{G}\mathbf{v}(i)][(\mathbf{G}\mathbf{H}_0\mathbf{F} - \mathbf{I})\mathbf{s}(i) + \mathbf{G}\mathbf{v}(i)]^{\mathcal{H}}\}$. By setting the gradient $\nabla_{\mathbf{G}} J(\mathbf{G}) = \mathbf{0}$ and solving for $\mathbf{G}$, we obtain the value $\mathbf{G} = \mathbf{G}_{\mathrm{mmse}}$ which minimizes the MSE [10]

$$\mathbf{G}_{\mathrm{mmse}} = \mathbf{R}_{ss}\mathbf{F}^{\mathcal{H}}\mathbf{H}_0^{\mathcal{H}}\left(\mathbf{R}_{vv} + \mathbf{H}_0\mathbf{F}\mathbf{R}_{ss}\mathbf{F}^{\mathcal{H}}\mathbf{H}_0^{\mathcal{H}}\right)^{-1}. \tag{17}$$

2) MMSE-DFE: A performance measure of a DFE receiver is the error $e(k)$ at the input of the decision device, $e(k) := \tilde{s}(k) - s(k)$. By defining $\mathbf{e}(i) := (e(iM)e(iM+1)\cdots e(iM+(M-1)))^T$, we have in vector form $\mathbf{e}(i) = \tilde{\mathbf{s}}(i) - \mathbf{s}(i)$. Using (11) and the standard assumption of correct past decisions, we infer that

$$\mathbf{e}(i) = \mathbf{W}\mathbf{y}(i) - (\mathbf{B} + \mathbf{I}_{M\times M})\,\mathbf{s}(i). \tag{18}$$

The block MMSE-DFE receiver should minimize the mean square error $E\{|\mathbf{e}(i)|^2\}$. Our problem is to find the feedforward filter matrix $\mathbf{W}$ and the feedback matrix $\mathbf{B}$ given the precoder matrix $\mathbf{F}$, channel matrix $\mathbf{H}_0$, input symbol correlation $\mathbf{R}_{ss}$ and the noise correlation $\mathbf{R}_{vv}$. As before, $\mathbf{B} + \mathbf{I}_{M\times M}$ should be upper triangular, so that successive cancellation can be carried out.

First, we assume that $\mathbf{B}$ is fixed and we obtain the matrix $\mathbf{W}$ which minimizes $E\{|\mathbf{e}(i)|^2\}$. Using the orthogonality principle, we find that $\mathbf{e}(i)$ should be orthogonal to $\mathbf{y}(i)$, which yields

$$\begin{aligned} E\{\mathbf{e}(i)\mathbf{y}^{\mathcal{H}}(i)\} &= \mathbf{0}_{M\times P} \Rightarrow \mathbf{W}E\{\mathbf{y}(i)\mathbf{y}^{\mathcal{H}}(i)\} \\ &= (\mathbf{B} + \mathbf{I}_{M\times M})E\{\mathbf{s}(i)\mathbf{y}^{\mathcal{H}}(i)\}. \end{aligned} \tag{19}$$

By defining $\mathbf{R}_{xx} := E\{\mathbf{x}(i)\mathbf{x}^{\mathcal{H}}(i)\} = (\mathbf{H}_0\mathbf{F})\mathbf{R}_{ss}(\mathbf{H}_0\mathbf{F})^{\mathcal{H}}$, and using the fact that the additive noise is independent of the transmitted data, we obtain

$$\begin{aligned} \mathbf{R}_{sy} &:= E\{\mathbf{s}(i)\mathbf{y}^{\mathcal{H}}(i)\} = E\{\mathbf{s}(i)[\mathbf{H}_0\mathbf{F}\mathbf{s}(i) + \mathbf{v}(i)]^{\mathcal{H}}\} \\ &= \mathbf{R}_{ss}(\mathbf{H}_0\mathbf{F})^{\mathcal{H}} = \mathbf{R}_{ys}^{\mathcal{H}} \\ \mathbf{R}_{yy} &:= E\{\mathbf{y}(i)\mathbf{y}^{\mathcal{H}}(i)\} = (\mathbf{H}_0\mathbf{F})\mathbf{R}_{ss}(\mathbf{H}_0\mathbf{F})^{\mathcal{H}} + \mathbf{R}_{vv} \\ &= \mathbf{R}_{xx} + \mathbf{R}_{vv}. \end{aligned} \tag{20}$$

From (19) and (20) we relate the feedforward and feedback filterbanks via

$$\begin{aligned} \mathbf{W} &= (\mathbf{B} + \mathbf{I}_{M\times M})\mathbf{R}_{ss}(\mathbf{H}_0\mathbf{F})^{\mathcal{H}} \\ &\quad \cdot \left((\mathbf{H}_0\mathbf{F})\mathbf{R}_{ss}(\mathbf{H}_0\mathbf{F})^{\mathcal{H}} + \mathbf{R}_{vv}\right)^{-1} \\ &= (\mathbf{B} + \mathbf{I}_{M\times M})\mathbf{R}_{sy}\mathbf{R}_{yy}^{-1}. \end{aligned} \tag{21}$$

Interestingly enough, $\mathbf{W}$ with the help of (17), can be written as $\mathbf{W} = (\mathbf{B} + \mathbf{I}_{M\times M})\mathbf{G}_{\mathrm{mmse}}$, which implies that the feedforward filter is the linear MMSE receiver followed by $(\mathbf{B} + \mathbf{I}_{M\times M})$ that takes into account the block feedback filter $\mathbf{B}$. Moreover, as we will see next the feedforward filter can be chosen to *whiten* the noise at the input of the decision device.

From (18) and (21) we can write $\mathbf{e}(i)$ as

$$\mathbf{e}(i) = (\mathbf{B} + \mathbf{I}_{M\times M})\boldsymbol{\epsilon}(i), \qquad \boldsymbol{\epsilon}(i) := \mathbf{R}_{sy}\mathbf{R}_{yy}^{-1}\mathbf{y}(i) - \mathbf{s}(i). \tag{22}$$

By defining $\mathbf{R}_{\epsilon\epsilon} := E\{\boldsymbol{\epsilon}(i)\boldsymbol{\epsilon}^{\mathcal{H}}(i)\}$ and using (20), we have

$$\begin{aligned} \mathbf{R}_{\epsilon\epsilon} &= E\left\{[\mathbf{R}_{sy}\mathbf{R}_{yy}^{-1}\mathbf{y}(i) - \mathbf{s}(i)][\mathbf{R}_{sy}\mathbf{R}_{yy}^{-1}\mathbf{y}(i) - \mathbf{s}(i)]^{\mathcal{H}}\right\} \\ &= \mathbf{R}_{ss} - \mathbf{R}_{sy}\mathbf{R}_{yy}^{-1}\mathbf{R}_{ys} \\ &= \mathbf{R}_{ss} - \mathbf{R}_{ss}(\mathbf{H}_0\mathbf{F})^{\mathcal{H}}\left((\mathbf{H}_0\mathbf{F})\mathbf{R}_{ss}(\mathbf{H}_0\mathbf{F})^{\mathcal{H}} + \mathbf{R}_{vv}\right)^{-1} \\ &\quad \cdot (\mathbf{H}_0\mathbf{F})\mathbf{R}_{ss}. \end{aligned} \tag{23}$$

Invoking the matrix inversion lemma,[2] we obtain $\mathbf{R}_{\epsilon\epsilon} = (\mathbf{R}_{ss}^{-1} + (\mathbf{H}_0\mathbf{F})^{\mathcal{H}}\mathbf{R}_{vv}^{-1}(\mathbf{H}_0\mathbf{F}))^{-1}$; thus, the covariance of $\mathbf{e}(i)$ in (22) is given by

$$\begin{aligned} \mathbf{R}_{ee} &:= E\left\{\mathbf{e}(i)\mathbf{e}^{\mathcal{H}}(i)\right\} = (\mathbf{B} + \mathbf{I}_{M\times M})\mathbf{R}_{\epsilon\epsilon}(\mathbf{B} + \mathbf{I}_{M\times M})^{\mathcal{H}} \\ &= (\mathbf{B} + \mathbf{I}_{M\times M})\left(\mathbf{R}_{ss}^{-1} + (\mathbf{H}_0\mathbf{F})^{\mathcal{H}}\mathbf{R}_{vv}^{-1}(\mathbf{H}_0\mathbf{F})\right)^{-1} \\ &\quad \cdot (\mathbf{B} + \mathbf{I}_{M\times M})^{\mathcal{H}}. \end{aligned} \tag{24}$$

As $E\{|\mathbf{e}(i)|^2\} = \mathrm{tr}\{\mathbf{R}_{ee}\}$, the minimization of MSE amounts to minimizing $\mathrm{tr}\{\mathbf{R}_{ee}\}$, under the constraint that $(\mathbf{B} + \mathbf{I}_{M\times M})$ is upper triangular with unit diagonal. Consider the Cholesky

[2]For A, B, C, D matrices of compatible dimensions it holds that: $(A - CB^{-1}D)^{-1} = A^{-1} + A^{-1}C(B - DA^{-1}C)^{-1}DA^{-1}$

factorization of $\mathbf{R}_{\epsilon\epsilon}$, namely $\mathbf{R}_{ss}^{-1} + (\mathbf{H}_0\mathbf{F})^{\mathcal{H}}\mathbf{R}_{vv}^{-1}(\mathbf{H}_0\mathbf{F}) = \mathbf{U}^{\mathcal{H}}\mathbf{D}\mathbf{U}$, where $\mathbf{U}$ is upper triangular with unit diagonal. By setting $\mathbf{B} = \mathbf{U} - \mathbf{I}_{M\times M}$, we obtain: $\mathbf{R}_{ee} = \mathbf{D}^{-1}$. As $\mathbf{D}$ is diagonal, the noise at the input of the decision device is *white*, which renders symbol-by-symbol detection optimal. We have thus established the following:

Lemma: Under the constraint that $\mathbf{B} + \mathbf{I}_{M\times M}$ is upper triangular with unit diagonal, the $\mathrm{tr}\{\mathbf{R}_{ee}\}$ is minimized by setting $\mathbf{B} = \mathbf{U} - \mathbf{I}_{M\times M}$, where $\mathbf{U}$ is a unit-diagonal, upper triangular matrix given by the Cholesky decomposition of $\mathbf{R}_{\epsilon\epsilon} = \mathbf{U}^{\mathcal{H}}\mathbf{D}\mathbf{U}$. Plugging such a $\mathbf{B}$ into (21) yields the MMSE-DFE feedforward filterbank $\mathbf{W}$.

Concluding this section, we see that eliminating IBI greatly simplifies the receiver structure, because in (8) the received blocks contain only ISI-impaired symbols from only the corresponding transmitted block. As a result, the receiver has to cope only with the factor $\mathbf{H}_0\mathbf{F}$ and the additive noise. A judiciously designed precoder $\mathbf{F}$ guarantees the existence of closed-form block receivers irrespective of the channel nulls. Consequently, our block DF receivers can be realized exactly, unlike serial ZF-DF receivers, which entail IIR feedforward and feedback structures and can only be approximated when implemented with an FIR tap-delay line. Furthermore, our block DF receivers do not suffer from catastrophic error propagation, because errors do not carry on from block to block.

IV. FIR Equalizing when IBI is Present

In Section III it was shown that to eliminate IBI, P has to be chosen so that $P \geq M + L$. Given the fact there are channels where L can be quite high (for example, in ADSL the channel may have 100 taps), having L redundant symbols may lead to a substantial decrease in information rate, unless high values for M are assumed (which will lead however to longer decoding delays). This imposes an inherent tradeoff between longer blocks (i.e., decoding delays) and information rate. One can dispense with this tradeoff by using less than L redundant symbols either through padding less than L trailing zeros, or, by using a cyclic prefix of length smaller than L. Both cases however, will lead to IBI which can be removed using a more complex receiver structure than that described in Section III. Hence, the tradeoff "longer blocks versus information rate" can be replaced by the tradeoff "small transmit-redundancy versus receiver complexity;" the latter does not possess only theoretical interest but holds practical importance as well. For example, allowing for IBI in OFDM systems reduces the required redundancy (that is the length of cyclic prefix) in long channels. In Section IV, we compare our block DF approach with recent approaches to handling long channels in OFDM [15]. But first, let us describe how IBI is removed using either a linear or a DFE receiver. As in Section III, we assume here that CIR is available only at the receiver. Section V with the blind channel estimation algorithms dispenses with this assumption.

A. Linear Receiver

It was proved in [10] that if the receive filters are FIR of length QM, then a linear ZF equalizing filterbank exists; a necessary condition for the existence of such a filterbank is $P \geq M + \lceil L/Q \rceil$. The decoded symbols are given by $\hat{\mathbf{s}}(n-d) = \sum_{q=0}^{Q-1} \mathbf{G}_q\mathbf{x}(n-q)$. Matrices $\mathbf{G}_0, \ldots, \mathbf{G}_{Q-1}$ denote the block equalizer's taps, and

$$\begin{aligned}&(\tilde{\mathbf{G}}_{Q-1}\cdots\mathbf{G}_0)_{M\times(QP-L)}\\ &\quad = \begin{pmatrix}\mathbf{0}_{M\times(d-1)M} & \mathbf{I}_{M\times M} & \mathbf{0}_{M\times(Q-d)M}\end{pmatrix}(\boldsymbol{\mathcal{H}}\boldsymbol{\mathcal{F}})^{\dagger}\end{aligned} \tag{25}$$

with $\tilde{\mathbf{G}}_{Q-1}$ the nonzero part of $\mathbf{G}_{Q-1} := (\mathbf{0}_{M\times L}\ \tilde{\mathbf{G}}_{Q-1})$, $\boldsymbol{\mathcal{H}}$ a $(QP-L)\times QP$ upper triangular Toeplitz matrix with first row $(h(L)\cdots h(0)\cdots 0)$, and $\boldsymbol{\mathcal{F}} := \mathbf{I}_{Q\times Q}\otimes\mathbf{F}$. As explained in [10], d denotes the delay of the equalizer, which can be optimized with respect to the SNR of the received block (see also [1] and [11]).

B. ZF-DFE

The ZF-DFE receiver of Section III-A can be modified so that IBI is removed; we call the modified receiver ZF-IBI-DFE. The key observation stems from (5): if the estimate $\hat{\mathbf{s}}(i-1)$ is correct, then by removing $\mathbf{H}_1\mathbf{F}\hat{\mathbf{s}}(i-1)$ from $\mathbf{x}(i)$, IBI is eliminated. Then, the ZF-DFE of Section III-A can be used to retrieve $\mathbf{s}(i)$. Under the assumption of correct past decisions, the noise whiteness is preserved, because the noise $\mathbf{v}(i)$ and $\hat{\mathbf{s}}(i-1) = \mathbf{s}(i-1)$ are uncorrelated. Fig. 4 depicts the receiver structure, which consists of two parts. The first part is responsible for removing IBI from the received data $\mathbf{y}(i)$ to obtain

$$\mathbf{y}'(i) := \mathbf{y}(i) - \mathbf{H}_1\mathbf{F}\hat{\mathbf{s}}(i-1). \tag{26}$$

The second part of the receiver is identical to the ZF-DFE of Section III-A. Hence, we have

$$\begin{aligned}\mathbf{z}(i) &:= \mathbf{W}\mathbf{y}'(i) = \mathbf{W}\mathbf{H}_0\mathbf{F}\mathbf{s}(i) + \mathbf{W}\mathbf{v}(i)\\ \tilde{\mathbf{s}}(i) &:= \mathbf{z}(i) - \mathbf{B}\hat{\mathbf{s}}(i), \qquad \hat{\mathbf{s}}(i) = Q(\tilde{\mathbf{s}}(i))\end{aligned} \tag{27}$$

where $\mathbf{W}$, $\mathbf{B}$ are given by (15). We underline that our approach is different from the one adopted in [15], where an one-tap DF receiver is proposed for OFDM systems with no cyclic prefix. In [15], IBI is removed from the received data as in (26), but then a linear MMSE block receiver is applied to $\mathbf{y}'(i)$. This approach could be characterized as "hybrid," because IBI is removed in a DF fashion but the IBI-free data are equalized linearly.

The ZF-IBI-DFE receiver possesses three distinct advantages over its linear counterpart. First, as it can be deduced from (25), for perfect recovery of the transmitted symbols (in the absence of noise), the matrix $\boldsymbol{\mathcal{H}}\boldsymbol{\mathcal{F}}$ needs to be invertible. Different from the IBI-free case, the invertibility of $\boldsymbol{\mathcal{H}}\boldsymbol{\mathcal{F}}$ imposes restrictions on the selection of the precoder matrix $\mathbf{F}$ (see also [10]). On the contrary, the ZF-IBI-DFE requires only the positive-definiteness of the matrix $(\mathbf{H}_0\mathbf{F})^{\mathcal{H}}\mathbf{H}_0\mathbf{F}$. Therefore, channels which cannot be equalized with a linear receive-filterbank can be equalized as long as the matrix $\mathbf{F}$ is chosen to be full column rank. The second advantage of the ZF-IBI-DFE is that the noise component $\mathbf{W}\mathbf{v}(i)$ at the input of the decision device is white; this implies that symbol-by-symbol detection (within a block) is optimal. On the other hand, with the linear receiver the noise at the input of the decision device is colored; hence, symbol-by-symbol detection is suboptimal. Finally, the third advantage of the ZF-IBI-DFE is computational efficiency:

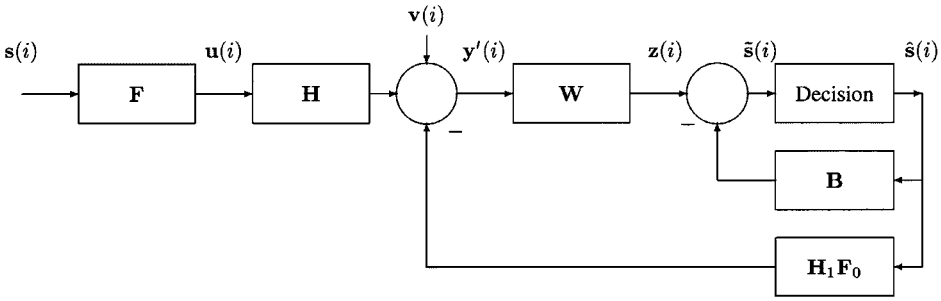

Fig. 4. Precoder, channel, and ZF-DFE when IBI is present.

whereas the linear receiver requires M FIR filters of length QM, the ZF-IBI-DFE requires $2M$ FIR filters of length M.

When compared to the ZF-DFE receiver of Section III-A, the ZF-IBI-DFE is more sensitive to possible error-propagation, although it is not as sensitive as the serial DFE that may lead to catastrophic error propagation unless frequently re-initialized with bandwidth-consuming training. This is because the decisions taken on a block of data are used for recovering the next block. However, as illustrated by the simulations of Section IV, the possible error-propagation does not have a catastrophic impact on the performance of the ZF-IBI-DFE receiver, in the sense that it still outperforms both its linear as well as its serial counterparts.

C. MMSE IBI-DFE Receiver

As explained in Section III-B, a receiver's figure of merit is the error $e(k)$ at the input of the decision device. We term the DFE receiver which minimizes the MSE $E\{|e(k)|^2\}$ in the presence of IBI, as MMSE-IBI-DFE, and in this section we find the corresponding feedforward and feedback filters.

Unfortunately in the presence of IBI the optimal DF receive structure is IIR, and a closed-form solution can only be given in the z-domain (using, e.g., the techniques in [4] and [17]). To reduce the complexity of implementation and provide a tractable closed-form solution, we study a three-block MMSE-IBI-DF receiver.[3] We start from the following observations: 1) the received blocks $\mathbf{y}(i)$, and $\mathbf{y}(i+1)$ contain information about the transmitted block $\mathbf{s}(i)$ in (5); and 2) the received block $\mathbf{y}(i-1)$ contains information about the transmitted block $\mathbf{s}(i-1)$ (note that $\mathbf{y}(i)$ contains IBI from $\mathbf{s}(i-1)$). Our three-block MMSE-IBI-DFE receiver utilizes the information given by $\mathbf{y}(i-1)$, $\mathbf{y}(i)$, and $\mathbf{y}(i+1)$ for the recovery of $\mathbf{s}(i)$. As a result, in matrix form the feedforward and feedback filters have the following form:

$$\begin{aligned}\mathbf{W}_i &= \mathbf{W}_{-1}\delta(i+1) + \mathbf{W}_0\delta(i) + \mathbf{W}_1\delta(i-1)\\ \mathbf{B}_i &= \mathbf{B}_{-1}\delta(i+1) + \mathbf{B}_0\delta(i) + \mathbf{B}_1\delta(i-1).\end{aligned} \tag{28}$$

To derive the settings of the block MMSE DF receiver, we introduce the vectors $\overline{\mathbf{y}}(i) := (\mathbf{y}^T(i+1)\ \mathbf{y}^T(i)\ \mathbf{y}^T(i-1))^T$ and $\overline{\mathbf{s}}(i) := (\mathbf{s}^T(i+1)\ \mathbf{s}^T(i)\ \mathbf{s}^T(i-1))^T$. Under the assumption that $E\{\mathbf{s}(i_1)\mathbf{s}^{\mathcal{H}}(i_2)\} = \mathbf{R}_{ss}\delta(i_1-i_2)$ and $E\{\mathbf{v}(i_1)\mathbf{v}^{\mathcal{H}}(i_2)\} = \mathbf{R}_{vv}\delta(i_1-i_2)$, it can be verified that for $\mathbf{R}_{\overline{s}\,\overline{s}} := E\{\overline{\mathbf{s}}(i)\overline{\mathbf{s}}^{\mathcal{H}}(i)\}$, $\mathbf{R}_{\overline{y}\,\overline{y}} := E\{\overline{\mathbf{y}}(i)\overline{\mathbf{y}}^{\mathcal{H}}(i)\}$, $\mathbf{R}_{\overline{s}\,\overline{s}} = \mathbf{I}_{3\times 3}\otimes\mathbf{R}_{ss}$, and $\mathbf{R}_{\overline{y}\,\overline{y}} = \mathbf{H}_F\mathbf{R}_{\overline{s}\,\overline{s}}\mathbf{H}_F^{\mathcal{H}} + \mathbf{R}_{\overline{v}\,\overline{v}}$, where

$$\mathbf{H}_F := \begin{pmatrix}\mathbf{H}_0\mathbf{F} & \mathbf{H}_1\mathbf{F} & \mathbf{0}_{P\times M}\\ \mathbf{0}_{P\times M} & \mathbf{H}_0\mathbf{F} & \mathbf{H}_1\mathbf{F}\\ \mathbf{0}_{P\times M} & \mathbf{0}_{P\times M} & \mathbf{H}_0\mathbf{F}\end{pmatrix}$$

and

$$\mathbf{R}_{\overline{v}\,\overline{v}} := \begin{pmatrix}\mathbf{R}_{vv} & \mathbf{0}_{P\times P} & \mathbf{0}_{P\times P}\\ \mathbf{0}_{P\times P} & \mathbf{R}_{vv} & \mathbf{0}_{P\times P}\\ \mathbf{0}_{P\times P} & \mathbf{0}_{M\times M} & \mathbf{R}_{vv}+\mathbf{H}_1\mathbf{F}\mathbf{R}_{ss}(\mathbf{H}_1\mathbf{F})^{\mathcal{H}}\end{pmatrix}. \tag{29}$$

Then, it is proved in the Appendix that the feedforward filter is given by

$$(\mathbf{W}_{-1}\ \ \mathbf{W}_0\ \ \mathbf{W}_1) = (\mathbf{0}_{M\times M}\ \ \mathbf{U}_{22}\ \ \mathbf{U}_{23})\,\mathbf{R}_{\overline{s}\,\overline{s}}\mathbf{H}_F^{\mathcal{H}}\mathbf{R}_{\overline{y}\,\overline{y}}^{-1}$$

and the feedback filter is given by

$$\mathbf{B}_0 + \mathbf{I}_{M\times M} = \mathbf{U}_{22} \quad \text{and} \quad \mathbf{B}_1 = \mathbf{U}_{23}$$

where $\mathbf{U}_{22}$, $\mathbf{U}_{23}$ are $M\times M$ submatrices of the $3M\times 3M$ matrix $\mathbf{U}_{3M\times 3M}$

$$\mathbf{U}_{3M\times 3M} = \begin{pmatrix}\mathbf{U}_{11} & \mathbf{U}_{12} & \mathbf{U}_{13}\\ \mathbf{0}_{M\times M} & \mathbf{U}_{22} & \mathbf{U}_{23}\\ \mathbf{0}_{M\times M} & \mathbf{0}_{M\times M} & \mathbf{U}_{33}\end{pmatrix} \tag{30}$$

and $\mathbf{U}_{3M\times 3M}$ is given by the Cholesky decomposition $\mathbf{R}_{\overline{s}\,\overline{s}} + \mathbf{H}_F^{\mathcal{H}}\mathbf{R}_{\overline{v}\,\overline{v}}^{-1}\mathbf{H}_F = \mathbf{U}_{3M\times 3M}^{\mathcal{H}}\mathbf{D}_{3M\times 3M}\mathbf{U}_{3M\times 3M}$.

Concluding this section, we see that in the IBI case the receiver structure becomes more complicated than that in IBI-absent case. Still, our block DF receivers are given by closed-form expressions and, thanks to our judicious design of the transmit precoder, their existence is guaranteed regardless of the FIR channel.

V. Blind CIR Acquisition

In Sections III and IV, we saw that transmitter-induced redundancy can be used to mitigate (or eliminate completely) the effects of IBI. In this section, we explore how transmit-redundancy can be used for channel estimation. As the receivers of Sections III and IV depend on the knowledge of the precoder and the channel matrices, accurate channel estimation plays an important role in the BER and throughput performance of the overall system.

[3]Though suboptimal, our three-block receiver outperforms the ZF receivers in almost all simulation examples of Section VI.

Blind channel estimation dispenses with transmission of training sequences, which results in bandwidth savings. Moreover, in the case of fast time-varying channels, the ability to blindly estimate the channel emancipates from the assumption that the channel remains constant during transmission of the training sequence and the subsequent information data. On the other hand, in slow time-varying channels (for example, slowly moving vehicles) channel estimates can be updated in an adaptive fashion.

In this section, we utilize the blind channel estimation algorithms of [11] and [12] and apply them to our block FIR DFE filterbanks at the receiver end. These algorithms require only an upper bound on the order of the FIR channel $h(n)$, do not pose any restrictions on the FIR channel zeros and are robust even when the channel order is overestimated. These features make the aforementioned channel estimation methods suitable not only for the blind linear filterbanks of [11] but also for our block DFE filterbanks. The basic idea is that N received data blocks are collected and from them we obtain the estimated channel vector $\hat{\mathbf{h}}$. This vector is used to construct the estimated channel matrices $\hat{\mathbf{H}}_0$, $\hat{\mathbf{H}}_1$, which are used to define along with our precoder $\mathbf{F}$ the matrices $\mathbf{W}$ and $\mathbf{B}$ under the ZF- or MMSE-DFE criteria. Our goal is to evaluate the performance of the channel estimation algorithms and study the impact of possible errors on the BER performance of the overall system (for a similar study on serial DFEs, see [2]). In this section, we provide a brief description of the blind algorithms of [11] and [12] and we defer the performance study for the simulations section.

When $P = M + L$ and IBI is absent, the blind channel estimation method can be summarized in the following steps.

---

s1.1 collect $N \geq P$ blocks of data to form the matrix $\mathbf{Y} := (\mathbf{y}(0) \cdots \mathbf{y}(N-1))$

s2.2 determine the L eigenvectors $\{\mathbf{v}_l\}_{l=1}^{L}$, which correspond to the L smallest eigenvalues of $\mathbf{Y}\mathbf{Y}^{\mathcal{H}}$ and for each l form the Hankel matrix $\mathbf{V}_l$ with first column $(v_l(0)\, v_l(1) \cdots v_l(L))^T$ and last row $(v_l(L)\, v_l(L+1) \cdots v_l(P-1))$

s1.3 estimate the channel vector $\mathbf{h}$ as the nontrivial solution of: $\mathbf{h}^{\mathcal{H}}(\mathbf{V}_1 \cdots \mathbf{V}_L)_{(L+1)\times ML} = \mathbf{0}_{1\times ML}$.

When $P < M + L$, IBI is present and our algorithm follows these steps:

---

s2.1 collect $N \geq QP + L + 1$ blocks of data, with $Q = \lceil (L+1)/(P-M) \rceil$, to form the $(QP - L) \times N$ matrix $\mathbf{Y}$:

$$\overline{\mathbf{Y}} = \left(\mathbf{0}_{(LM+M+1)\times L} \;\; \mathbf{I}_{(LM+M+1)\times(LM+M+1)}\right) \cdot \begin{pmatrix} \mathbf{y}(0) & \cdots & \mathbf{y}(N-L-1) \\ \vdots & & \vdots \\ \mathbf{y}(L-1) & \cdots & \mathbf{y}(N-1) \end{pmatrix}_{(QP+1)\times(N-L)}$$

s2.2 determine the eigenvectors $\{\overline{\mathbf{v}}_l\}_{l=1}^{Q(P-M)-L+1}$ corresponding to the $Q(P-M) - L + 1$ smallest eigenvalues of $\overline{\mathbf{Y}}\,\overline{\mathbf{Y}}^{\mathcal{H}}$, and for each l form the $(L+1) \times LP$ Hankel matrix $\overline{\mathbf{V}}_l$ with first column $(\mathbf{0}_{1\times L}\; \overline{v}(0))^T$ and last row $(\overline{\mathbf{v}}^{\mathcal{H}}\; \mathbf{0}_{1\times L})$

s2.3 estimate the channel vector $\mathbf{h}$ as the nontrivial solution of:

$$\mathbf{h}^{\mathcal{H}}\left(\overline{\mathbf{V}}_1 \cdots \overline{\mathbf{V}}_{Q(P-M)-L+1}\right)\left(I_{Q\times Q} \otimes \mathbf{F}_0\right) = \mathbf{0}_{1\times QM}$$

The blind channel estimation algorithms will be used in our block DFE receivers to render them self-recovering. A study of how successful this endeavor is will be described in the following section.

VI. Simulation Examples

In the previous sections, we saw how transmit-induced redundancy: 1) facilitates the derivation of closed-form expressions for block DFE receivers which can be implemented exactly with FIR filterbanks; 2) guarantees channel invertibility irrespective of channel nulls; 3) enables reduction of error propagation; and 4) allows for blind channel estimation. In this section, we present simulation results to verify our claims and illustrate the characteristics of our filterbank transceivers. In all examples, the figure of merit is BER as a function of E_b/N_o. The BER is calculated averaging over 700 Monte Carlo simulations assuming BPSK modulation.

A. Receiver Performance with no IBI

Example 1—Block MMSE-DFE Achieves Lowest BER: We consider a zero-padded OFDM precoder with $P = M + L$. Specifically, $M = 32$, $P = 36$ for a known FIR channel of order $L = 4$ with zeros at $0.8, 1, 0.9\,\exp(j9\pi/20)$, $1.1\exp(-j9\pi/20)$. Fig. 5 depicts the BER performance as a function of E_b/N_o, where $E_b = E_s = \mathrm{tr}\{\mathbf{F}_0\mathbf{F}_0^{\mathcal{H}}\}/M$. The input correlation matrix is $\mathbf{R}_{ss} = \mathbf{I}_{M\times M}$, and the additive noise is zero-mean white with $\mathbf{R}_{vv} = \sigma_v^2\mathbf{I}_{P\times P}$, and $\sigma_v^2 = N_o$. The precoder matrix is $\mathbf{F}_0 = [\mathbf{F}]_{m,n}$ with trailing zeros; i.e.,

$$\mathbf{F}_{m,n} = \begin{cases} e^{j(2\pi/M)mn}: & 0 \leq m \leq M-1;\;\; 0 \leq n \leq M-1 \\ 0: & M \leq m \leq P-1;\;\; 0 \leq n \leq M-1. \end{cases}$$

From Fig. 5 we observe that the block DFE receivers outperform the linear receivers in both cases. As expected, as the SNR E_b/N_o increases, the performance improvement becomes more evident.

Example 2—The Precoder Does Make a Difference: To test whether the selection of a precoder matrix has an impact on BER we have simulated the system of Example 1 using three different precoders: the OFDM precoder of Example 1, a Hadamard precoder $\mathbf{F}_{\mathrm{HAD}}$, and the optimal ZF-precoder $\mathbf{F}_{\mathrm{opt}}$ of [10]. The precoder $\mathbf{F}_{\mathrm{HAD}}$ is given by the MATLAB function `hadamard(M)` concatenated with trailing zeros. The first M rows of $\mathbf{F}_{\mathrm{opt}}$ are given by $\mathbf{V}_{\mathrm{opt}}\mathbf{\Lambda}_{\mathrm{opt}}^{-1/2}$, where $\mathbf{V}_{\mathrm{opt}}$, $\mathbf{\Lambda}_{\mathrm{opt}}$ are obtained by eigendecomposing $\mathbf{H}_0^{\mathcal{H}}\mathbf{R}_{vv}^{-1}\mathbf{H}_0 = \mathbf{V}_{\mathrm{opt}}\mathbf{\Lambda}_{\mathrm{opt}}\mathbf{V}_{\mathrm{opt}}^{\mathcal{H}}$ (for the optimal precoder, the channel is assumed known both to the receiver and the transmitter). Fig. 6 depicts BER performance of the four receivers of Section III. These results indicate that the precoder's choice does make a difference. As

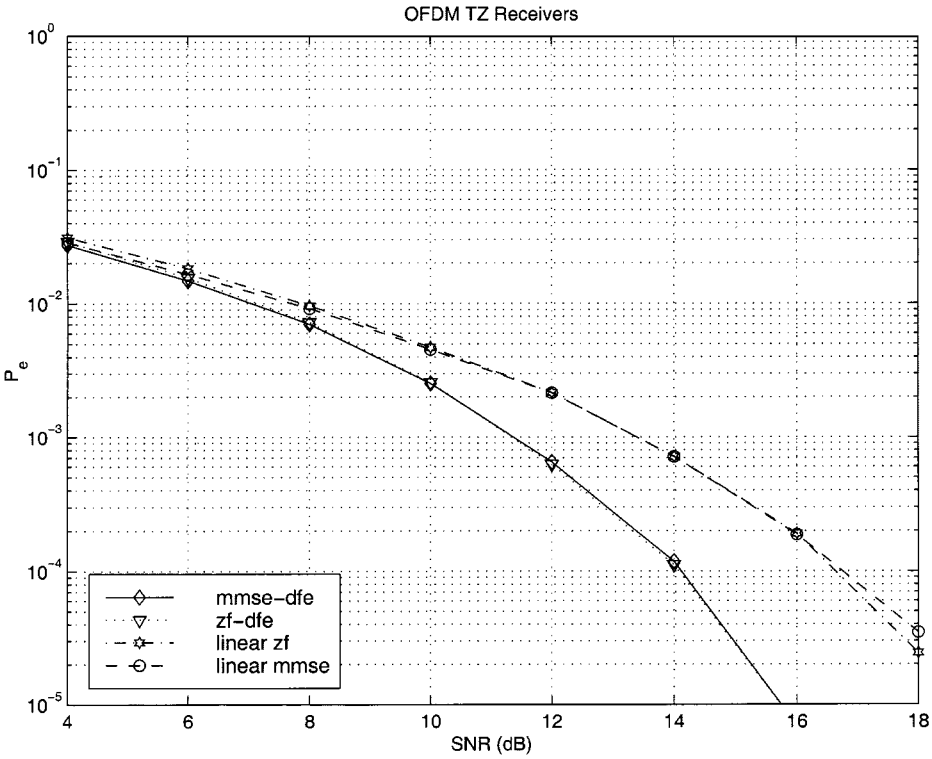

Fig. 5. Receiver BER performance.

it can be deduced from the figures, $\mathbf{F}_{\rm opt}$ results in the best BER performance[4] and its performance for all four receivers is identical. This is because $\mathbf{F}_{\rm opt}$ diagonalizes the channel (a related observation was made in [19]).

B. Receiver Performance with IBI

Example 3—Transmitter-Induced Redundancy Improves BER Performance: We use an FIR channel of order $L = 6$ with zeros at 1, $0.9\exp(j9\pi/20)$, $1.1\exp(-j9\pi/20)$, -0.8, $0.5j$, $-2j$. We study the performance of the three receivers of Section IV and of the "hybrid" receiver in [15], when $M = 18$, $Q = 2$ (which results in $P = 21$) and $Q = 3$ (which results in $P = 20$). Fig. 7 depicts BER performance of the four receivers. We observe that the linear receiver does not suffer from noticeable BER performance degradation when less redundancy is used. However, the BER performance of block DFE receivers is worse when a smaller number of trailing zeros is used. Moreover, it is evident that the block MMSE-IBI-DFE receiver yields the best BER performance. Note that in this example we have used a TDMA-like precoder, which corresponds to $\mathbf{F} = (\mathbf{I}_{M\times M}\ \mathbf{0}_{M\times(P-M)})^T$.

Example 4—Channel Equalization with Minimum Redundancy Precoders: We have tested the extreme case of $P = M + 1$ using $M = 10$, $L = 4$ (the channel of Example 1) and $P = 11$. Fig. 8 shows the performance of the four receivers. From the figure we deduce that still the MMSE-IBI-DFE receiver has the best BER performance. Although the ZF-IBI-DFE receiver has better performance than its linear counterpart, the difference in performance is not as noticeable as the one observed in Example 3.

[4]Note that the performance of the OFDM precoder can be improved by proper power allocation across subchannels. Such a performance improvement is further testament to the role of the precoder matrix; design of the optimal transmit precoder is beyond the scope of this paper.

C. Block DFEs with Blind Channel Estimates

Example 5—Blind Channel Estimation in the Absence of IBI: To study the performance of our blind DFE algorithm, we use the settings of Example 1, but now the channel matrix $\mathbf{H}_0$ is not known at the receiver end. The receiver estimates the channel matrix $\mathbf{H}_0$ and using the estimate $\hat{\mathbf{H}}_0$ defines the receive filterbanks as explained in Section III (of course the receiver knows the transmit precoder). Fig. 9 depicts the performance of the four receivers. Even in the blind scenario, the block DFE filterbanks exhibit better performance than their linear counterparts; the block MMSE-DFE receiver shows the best BER performance. Moreover, Fig. 9 indicates that in our block approach to blind equalization, channel estimation errors do not result in catastrophic errors in the DFE receivers. Contrary to serial DFE schemes, error propagation in block DFEs is "limited" within a block. As expected, the BER performance of all receivers is worse than that of the receivers in Example 1.

Example 6—Blind Channel Estimation in the Presence of Severe IBI: Similar to Example 5, we use the settings of Example 4. Fig. 10 depicts the performance of the three receivers. As in Example 5, we observe that the DFE receivers perform better than the linear receivers. By comparing Fig. 10 with Fig. 8, we observe that, as expected, the BER performance is worse in the blind scenario by approximately 5 dB at $\mathrm{BER} = 10^{-3}$.

D. Block MMSE-DF Receivers Versus Serial MMSE-DF Receivers

As the previous examples motivated the block MMSE DF receivers as the best choice (with respect to BER), we compare

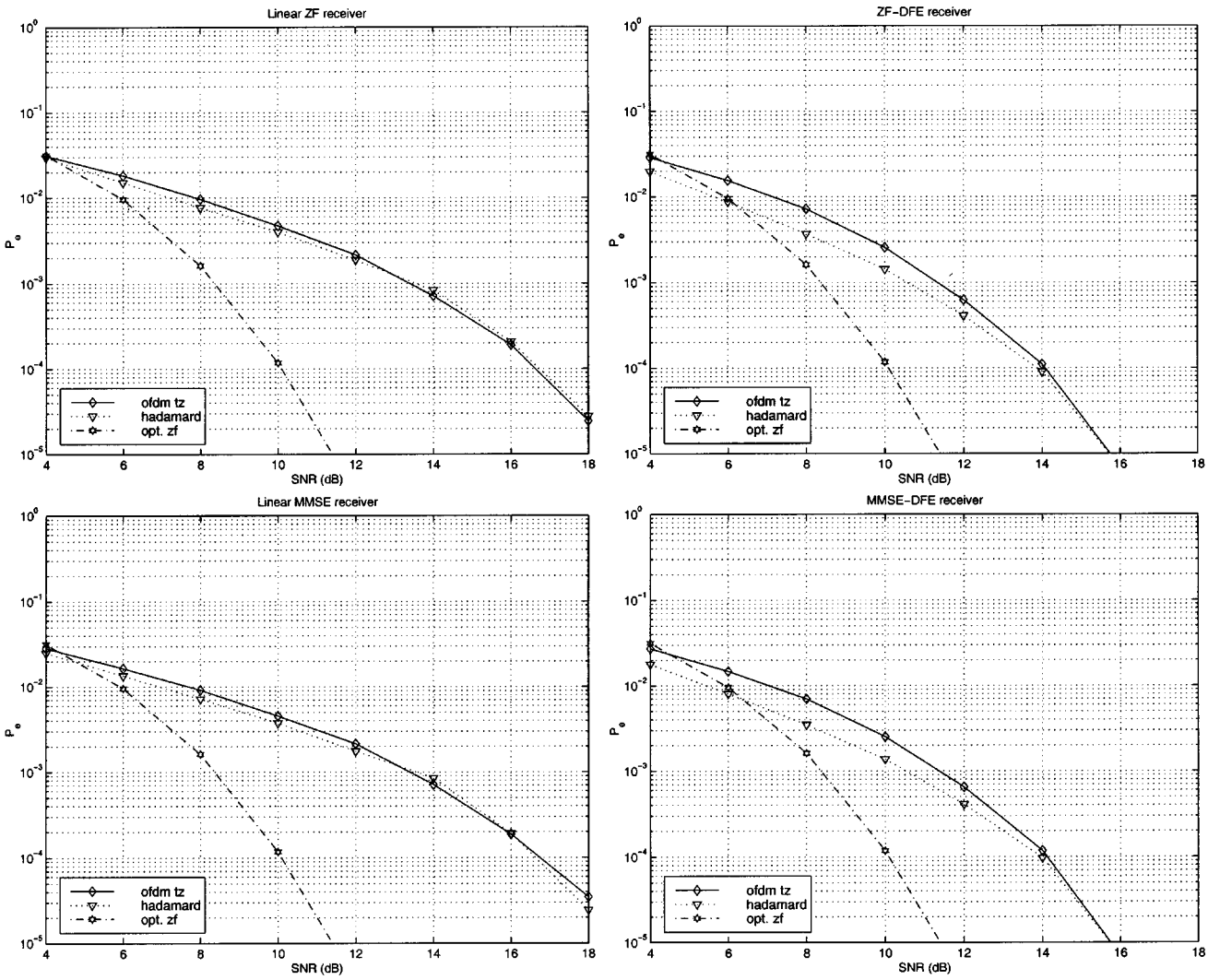

Fig. 6. Receiver BER performance for different precoders.

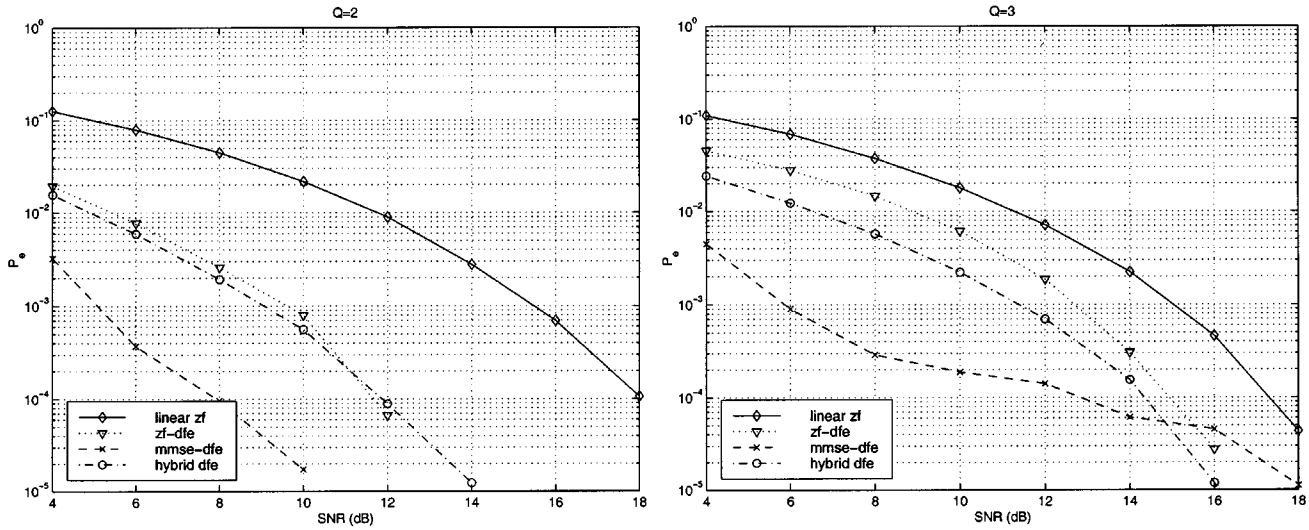

Fig. 7. Redundancy improves performance.

them to the serial MMSE-DF receiver of [1] in the practical context of HIPERLAN/2. HIPERLAN/2 is a broadband communications standard operating over 20 MHz in the 5-GHz band. In our study, we look at "Channel A" of [3], which models a typical office environment as an FIR filter with Rayleigh fading statistics and delays in the range 0–390 ns with a spacing of 10 ns.

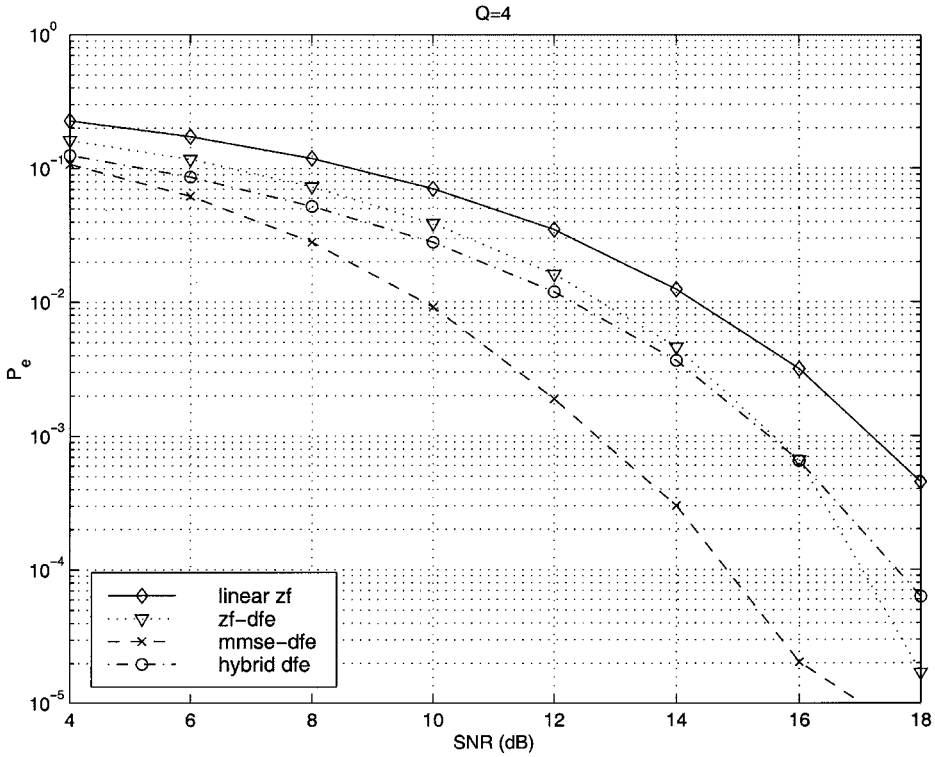

Fig. 8. Channel equalization with minimum possible transmit redundancy.

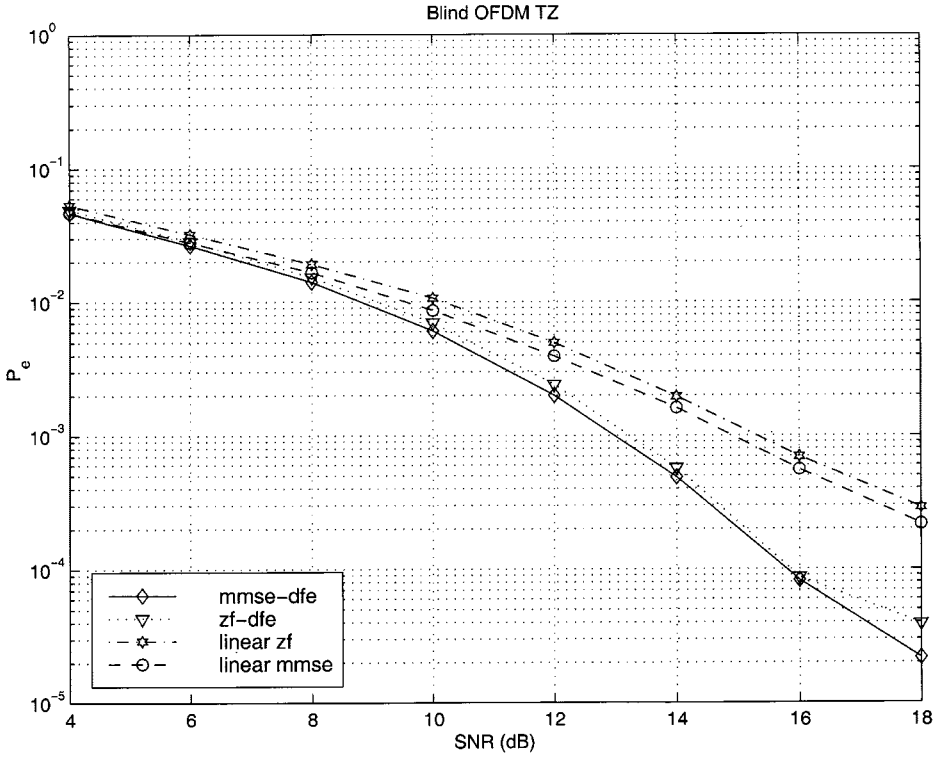

Fig. 9. Blind channel estimation in the IBI-free case.

As 40 taps constitute a rather long channel, we have truncated the channel to $L = 11$ (by retaining 90% of its energy); note that the taps do not have equal average relative powers [3]. We generated 50 such random HIPERLAN/2 channels and we averaged the corresponding BERs. For the serial MMSE DFE receiver, the symbol-spaced feedforward filter has length M, and the feedback filter has length $L+1$; both filters were calculated using (34) and (35) of [1]. The block transmission scheme uses $P = 16$ and the precoder matrix appends trailing zeros (TZs) at the end of every input data block.

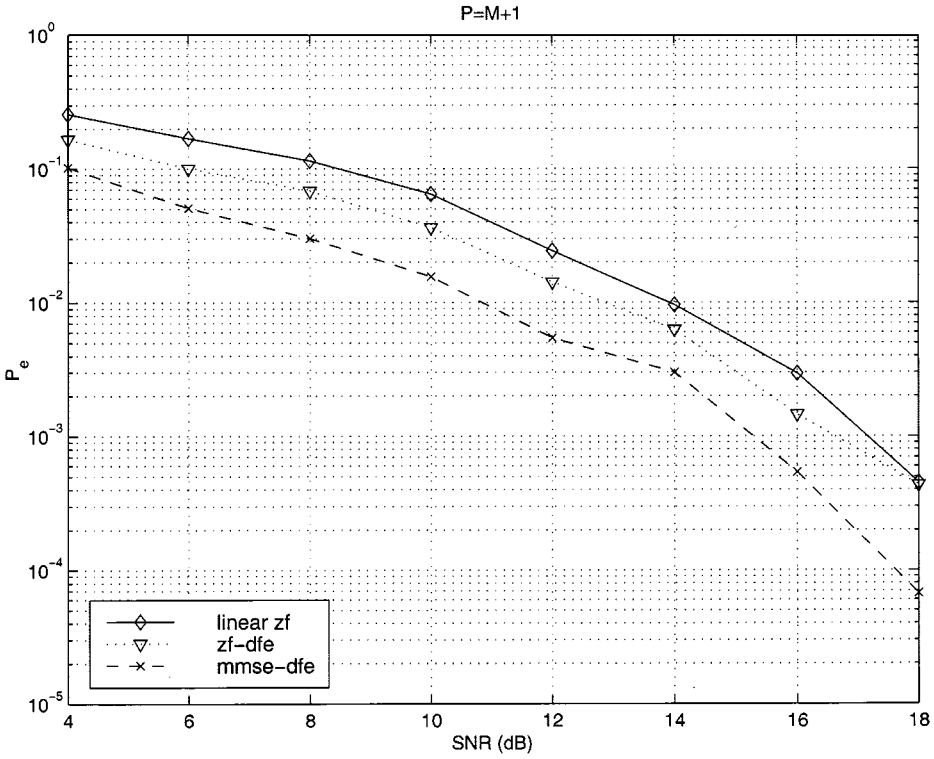

Fig. 10. Blind channel estimation under severe IBI.

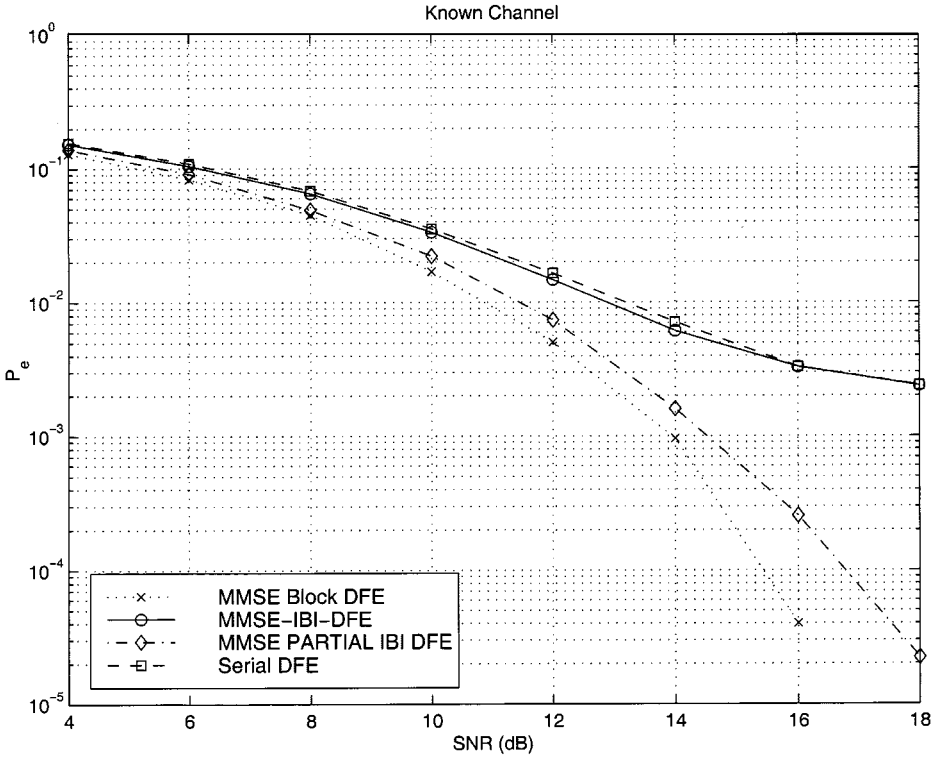

Fig. 11. Block transmission versus serial transmission.

Example 7—Block Transmission Improves BER Performance: Fig. 11 depicts BER performance of the IBI-free block MMSE receiver ($M = P - L = 5$), the "partial" IBI DFE receiver ($M = P - L/2 = 9$), the minimum redundancy block MMSE receiver ($M = P - 1$), and the serial MMSE receiver, when CIR is available at the receiver. We observe that in the absence of IBI, the block MMSE-DF receiver clearly outperforms the other receivers, at the expense of redundancy (as the channel is fairly long). The minimum redundancy TZ precoder/MMSE block DF receiver slightly outperforms the

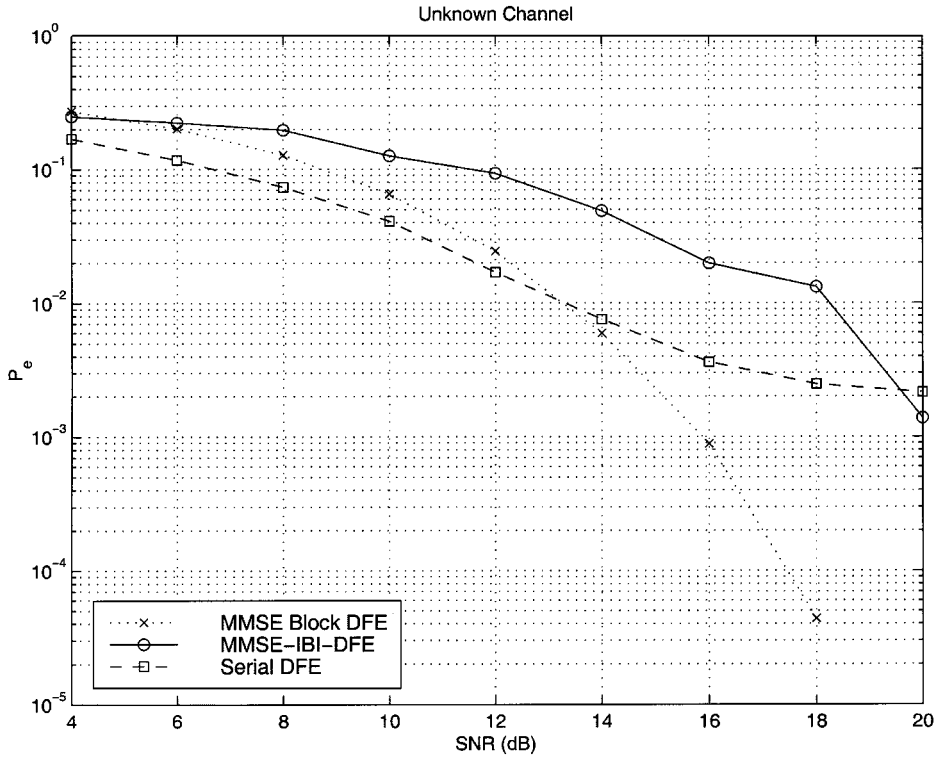

Fig. 12. Blind equalization versus trained equalization.

serial DF receiver. Moreover, it can be seen that as the amount of redundancy decreases, so does the BER performance, which validates our assertion that block transmission schemes result in better BER performance than that of serial transmission schemes.

Example 8—Blind DFE Outperforms Trained DFE: Fig. 12 depicts BER performance when the channel is not known to the receiver (an upper bound on its order is assumed available). For the block transmission schemes, the receiver uses the blind estimation algorithms of Section V. The serial MMSE receiver uses training to acquire CIR: training amounts to sending a known sequence and then estimating the channel using a least squares approach. For a fair comparison, the length of the training sequence is PL, because for the IBI-free case our blind estimation algorithm requires $N = P$ blocks, which corresponds to a redundancy of PL symbols. We observe that the performance of the serial DFE is almost identical to the performance of the block DFE when the channel is known. With blind channel estimators the performance decreases, but block DFEs outperform the training-based serial DFE once the channel estimate becomes reliable at moderate-high SNR values (greater than 14 dB).

VII. Conclusions and Future Research

In block transmission systems, transmitter-induced redundancy using FIR filterbanks provides us with degrees of freedom which can be exploited to achieve blind channel estimation and block DF equalization with FIR filterbanks. The receiver structure and the corresponding BER performance depend critically on the selection of the transmitter precoder. We have derived closed-form solutions for the block FIR linear and nonlinear decision-feedback receivers corresponding to various forms of transmitter redundancy. The tradeoff between transmitter redundancy and receiver complexity has also been delineated. When the number of trailing zeros is equal to the FIR channel order, IBI is obviated, the receiver structure is simplified, and the best BER performance is achieved with DF filterbanks. As the input redundancy decreases (as in OFDM transmitters with insufficient cyclic prefix) the length of the receive FIR filterbanks increases and performance degrades. Using block channel estimation methods relying on redundant filterbank precoders enables a framework where the DFE filterbank acquires channel information blindly and adjusts its FIR filters accordingly.

A number of future research topics lies ahead of us: multiuser/multichannel extensions, improvement of the channel estimation methods by decision-directed adaptive algorithms, joint optimization of transmitter and DFE-receiver filterbanks, and quantitative analysis of the BER and throughput performance of our system (along the lines of, e.g., [7] and [13]).

Appendix

Derivation of MMSE-IBI-DFE Settings

Note that in (28) $\mathbf{B}_{-1}$ should be equal to $\mathbf{0}_{M\times M}$ so that successive cancellation is possible (when decisions are made about $\mathbf{s}(i)$, only $\hat{\mathbf{s}}(i-1)$ and part of $\hat{\mathbf{s}}(i)$ are available). However, as it will be shown later on, minimization of $E\{|\mathbf{e}(i)|^2\}$ will yield $\mathbf{B}_{-1} = \mathbf{0}_{M\times M}$.

By introducing the $3P \times 1$ vector $\overline{\mathbf{y}}(i) := (\mathbf{y}^T(i+1)\ \mathbf{y}^T(i)\ \mathbf{y}^T(i-1))^T$, the $3M \times 1$ vectors $\overline{\mathbf{s}} := (\mathbf{s}^T(i+1)\ \mathbf{s}^T(i)\ \mathbf{s}^T(i-1))^T$, $\hat{\overline{\mathbf{s}}} := (\hat{\mathbf{s}}^T(i+1)\ \hat{\mathbf{s}}^T(i)\ \hat{\mathbf{s}}^T(i-1))^T$, the $M \times 3P$ matrix

$$\mathbf{U}_{3M\times 3M}^{-1} = \begin{pmatrix} \mathbf{U}_{11}^{-1} & -\mathbf{U}_{11}^{-1}\mathbf{U}_{12}\mathbf{U}_{22}^{-1} & -\mathbf{U}_{11}^{-1}\mathbf{U}_{13}\mathbf{U}_{33}^{-1} + \mathbf{U}_{11}^{-1}\mathbf{U}_{12}\mathbf{U}_{22}^{-1}\mathbf{U}_{23}\mathbf{U}_{33}^{-1} \\ \mathbf{0}_{M\times M} & \mathbf{U}_{22}^{-1} & -\mathbf{U}_{22}^{-1}\mathbf{U}_{23}\mathbf{U}_{33}^{-1} \\ \mathbf{0}_{M\times M} & \mathbf{0}_{M\times M} & \mathbf{U}_{33}^{-1} \end{pmatrix} \tag{35}$$

$\overline{\mathbf{W}} := (\mathbf{W}_{-1}\ \mathbf{W}_0\ \mathbf{W}_1)$, and the $M \times 3M$ matrix $\overline{\mathbf{B}} := (\mathbf{B}_{-1}\ \mathbf{B}_0 + \mathbf{I}_{M\times M}\ \mathbf{B}_1)$, we can write (under the assumption of correct past decisions)

$$\begin{aligned} \mathbf{z}(i) &= \mathbf{W}_{-1}\mathbf{y}(i+1) + \mathbf{W}_0\mathbf{y}(i) + \mathbf{W}_1\mathbf{y}(i-1) \Rightarrow \\ &\qquad \mathbf{z}(i) = \overline{\mathbf{W}}\overline{\mathbf{y}}(i) \\ \tilde{\mathbf{s}}(i) &= \mathbf{z}(i) - \mathbf{B}_{-1}\hat{\mathbf{s}}(i+1) - \mathbf{B}_0\hat{\mathbf{s}}(i) - \mathbf{B}_1\hat{\mathbf{s}}(i-1) \Rightarrow \\ &\qquad \tilde{\mathbf{s}}(i) = \mathbf{z}(i) - \overline{\mathbf{B}}\hat{\overline{\mathbf{s}}}(i) + \hat{\mathbf{s}}(i) \\ \mathbf{e}(i) &= \tilde{\mathbf{s}}(i) - \mathbf{s}(i) \Rightarrow \quad \mathbf{e}(i) = \overline{\mathbf{W}}\overline{\mathbf{y}}(i) - \overline{\mathbf{B}}\overline{\mathbf{s}}(i). \end{aligned} \tag{31}$$

Note that (31) corresponds to (18). Working as in Section III-B-2, we obtain: $\overline{\mathbf{W}} = \overline{\mathbf{B}}\mathbf{R}_{\overline{s}\,\overline{y}}\mathbf{R}_{\overline{y}\,\overline{y}}^{-1}$, where $\mathbf{R}_{\overline{s}\,\overline{y}} := E\{\overline{\mathbf{s}}(i)\overline{\mathbf{y}}^{\mathcal{H}}(i)\}$, and $\mathbf{R}_{\overline{y}\,\overline{y}} := E\{\overline{\mathbf{y}}(i)\overline{\mathbf{y}}^{\mathcal{H}}(i)\}$. Then (31) yields

$$\begin{aligned} &\mathbf{e}(i) = \overline{\mathbf{B}}\boldsymbol{\epsilon}(i) \qquad \boldsymbol{\epsilon}(i) := \mathbf{R}_{\overline{s}\,\overline{y}}\mathbf{R}_{\overline{y}\,\overline{y}}^{-1}\overline{\mathbf{y}}(i) - \overline{\mathbf{s}}(i) \\ &\mathbf{R}_{ee} := E\{\mathbf{e}(i)\mathbf{e}^{\mathcal{H}}(i)\} = \overline{\mathbf{B}}\mathbf{R}_{\epsilon\epsilon}\overline{\mathbf{B}}^{\mathcal{H}} \qquad \mathbf{R}_{\epsilon\epsilon} := E\{\boldsymbol{\epsilon}(i)\boldsymbol{\epsilon}^{\mathcal{H}}(i)\}. \end{aligned} \tag{32}$$

Our objective is to minimize $E\{|\mathbf{e}(i)|^2\} = \mathrm{tr}\{\mathbf{R}_{ee}\}$ by selecting properly the matrix $\overline{\mathbf{B}}$, under the constraint that $\mathbf{B}_0 + \mathbf{I}_{M\times M}$ is upper triangular with unit diagonal. To do this, as (32) indicates, we need to calculate $\mathbf{R}_{\epsilon\epsilon}$. As in Section III-B-2 [cf. (23)], we obtain $\mathbf{R}_{\epsilon\epsilon} = \mathbf{R}_{\overline{s}\,\overline{s}} - \mathbf{R}_{\overline{s}\,\overline{y}}\mathbf{R}_{\overline{y}\,\overline{y}}^{-1}\mathbf{R}_{\overline{y}\,\overline{s}}$.

Now we need to look at the precise form of $\mathbf{R}_{\overline{s}\,\overline{y}}$, $\mathbf{R}_{\overline{y}\,\overline{y}}$, and $\mathbf{R}_{\overline{y}\,\overline{s}} := E\{\overline{\mathbf{y}}(i)\overline{\mathbf{s}}^{\mathcal{H}}(i)\}$. Using (5), we obtain

$$\begin{aligned} \mathbf{R}_{\overline{y}\,\overline{s}} &= E\left\{ \begin{pmatrix} \mathbf{H}_0\mathbf{F}\mathbf{s}(i+1) + \mathbf{H}_1\mathbf{F}\mathbf{s}(i) + \mathbf{v}(i+1) \\ \mathbf{H}_0\mathbf{F}\mathbf{s}(i) + \mathbf{H}_1\mathbf{F}\mathbf{s}(i-1) + \mathbf{v}(i) \\ \mathbf{H}_0\mathbf{F}\mathbf{s}(i-1) + \mathbf{H}_1\mathbf{F}\mathbf{s}(i-2) + \mathbf{v}(i-1) \end{pmatrix} \cdot \overline{\mathbf{s}}^{\mathcal{H}}(i) \right\} \\ &= \mathbf{H}_F\mathbf{R}_{\overline{s}\,\overline{s}} \end{aligned} \tag{33}$$

where we have assumed that $E\{\mathbf{s}(i_1)\mathbf{s}^{\mathcal{H}}(i_2)\} = \mathbf{R}_{ss}\delta(i_1 - i_2)$, and $E\{\mathbf{v}(i_1)\mathbf{v}^{\mathcal{H}}(i_2)\} = \mathbf{R}_{vv}\delta(i_1 - i_2)$. This is a reasonable assumption, which certainly holds true for white input symbols and additive white noise.

In the same way, we obtain $\mathbf{R}_{\overline{s}\,\overline{y}} = \mathbf{R}_{\overline{s}\,\overline{s}}\mathbf{H}_F^{\mathcal{H}}$ and $\mathbf{R}_{\overline{y}\,\overline{y}} = \mathbf{H}_F\mathbf{R}_{\overline{s}\,\overline{s}}\mathbf{H}_F^{\mathcal{H}} + \mathbf{R}_{\overline{v}\,\overline{v}}$. Hence, we arrive at

$$\begin{aligned} &\mathbf{R}_{\overline{s}\,\overline{y}} = \mathbf{R}_{\overline{s}\,\overline{s}}\mathbf{H}_F^{\mathcal{H}} \qquad \mathbf{R}_{\overline{y}\,\overline{s}} = \mathbf{H}_F\mathbf{R}_{\overline{s}\,\overline{s}} = \mathbf{R}_{\overline{s}\,\overline{y}}^{\mathcal{H}} \\ &\mathbf{R}_{\overline{y}\,\overline{y}} = \mathbf{H}_F\mathbf{R}_{\overline{s}\,\overline{s}}\mathbf{H}_F^{\mathcal{H}} + \mathbf{R}_{\overline{v}\,\overline{v}} \end{aligned} \tag{34}$$

which corresponds to (20). Note that in (29) the factor $\mathbf{H}_1\mathbf{F}\mathbf{R}_{ss}(\mathbf{H}_1\mathbf{F})^{\mathcal{H}}$ of the bottom-left entry of $\mathbf{R}_{\overline{v}\,\overline{v}}$ models the IBI caused by the block $\mathbf{s}(i-2)$ which is not included in $\overline{\mathbf{s}}(i)$.

Using (34) and the matrix inversion lemma, we obtain the $3M \times 3M$ matrix $\mathbf{R}_{\epsilon\epsilon}$ as

$$\mathbf{R}_{\epsilon\epsilon} = \left(\mathbf{R}_{\overline{s}\,\overline{s}}^{-1} + \mathbf{H}_F^{\mathcal{H}}\mathbf{R}_{\overline{v}\,\overline{v}}^{-1}\mathbf{H}_F\right)^{-1}.$$

Now consider the Cholesky decomposition $\mathbf{R}_{\overline{s}\,\overline{s}}^{-1} + \mathbf{H}_F^{\mathcal{H}}\mathbf{R}_{\overline{v}\,\overline{v}}^{-1}\mathbf{H}_F = \mathbf{U}_{3M\times 3M}^{\mathcal{H}}\mathbf{D}_{3M\times 3M}\mathbf{U}_{3M\times 3M}$, where $\mathbf{U}_{3M\times 3M}$ is upper triangular with unit diagonal, and $\mathbf{D}_{3M\times 3M}$ is diagonal with positive entries. Then, we obtain: $\mathbf{R}_{\epsilon\epsilon} = \mathbf{U}_{3M\times 3M}^{-1}\mathbf{D}_{3M\times 3M}^{-1}\mathbf{U}_{3M\times 3M}^{-\mathcal{H}}$, and (32) becomes

$$\mathbf{R}_{\epsilon\epsilon} = \left(\overline{\mathbf{B}}\mathbf{U}_{3M\times 3M}^{-1}\right)\mathbf{D}_{3M\times 3M}^{-1}\left(\overline{\mathbf{B}}\mathbf{U}_{3M\times 3M}^{-1}\right)^{\mathcal{H}}.$$

To minimize $\mathrm{tr}\{\mathbf{R}_{ee}\}$, we observe that it is a quadratic form of $\overline{\mathbf{B}}\mathbf{U}_{3M\times 3M}^{-1}$; thus, we need to nullify as many entries of $\overline{\mathbf{B}}\mathbf{U}_{3M\times 3M}^{-1}$ as possible, under the constraint that $\mathbf{B}_0 + \mathbf{I}_{M\times M}$ is upper triangular with unit diagonal. To accomplish this, we express $\mathbf{U}_{3M\times M}^{-1}$ in terms of the submatrices $\mathbf{U}_{ij}$ $(1 \le i, j \le 3)$ of $\mathbf{U}_{3M\times 3M}$ in (30) as in (35), shown at the top of the page. Note that the inverse submatrices exist because $\mathbf{U}_{3M\times 3M}$ is full rank. By setting

$$\mathbf{B}_{-1} = \mathbf{0}_{M\times M} \qquad \mathbf{B}_0 + \mathbf{I}_{M\times M} = \mathbf{U}_{22} \quad \text{and} \quad \mathbf{B}_1 = \mathbf{U}_{23}$$

we obtain $\overline{\mathbf{B}}\mathbf{U}_{3M\times M}^{-1} = (\mathbf{0}_{M\times M}\ \mathbf{I}_{M\times M}\ \mathbf{0}_{M\times M})$, which leads to $\mathbf{R}_{ee}^{\min} = \mathbf{D}_2^{-1}$, where $\mathbf{D}_{3M\times 3M} = \mathrm{diag}(\mathbf{D}_1, \mathbf{D}_2, \mathbf{D}_3)$, and $\mathbf{D}_1$, $\mathbf{D}_2$, $\mathbf{D}_3$ are $M \times M$ diagonal matrices. Therefore, the minimum MSE is $E\{|\mathbf{e}(i)|^2\} = \mathrm{tr}\{\mathbf{R}_{ee}^{\min}\} = \mathrm{tr}\{\mathbf{D}_2^{-1}\}$. Observe that $\mathbf{R}_{ee}^{\min}$ is diagonal, which implies that the feedforward filter $\overline{\mathbf{W}}$ has whitened the noise and rendered symbol-by-symbol detection optimal. The settings of $\overline{\mathbf{W}}$ are given by $(\mathbf{W}_{-1}\ \ \mathbf{W}_0\ \ \mathbf{W}_1) = (\mathbf{0}_{M\times M}\ \ \mathbf{U}_{22}\ \ \mathbf{U}_{23})\,\mathbf{R}_{\overline{s}\,\overline{y}}\mathbf{R}_{\overline{y}\,\overline{y}}^{-1}$. The feedforward (feedback) filterbank consists of P (M) FIR filters $\{w_p(m)\}_{p=0}^{P-1}$ $(\{b_m(i)\}_{p=0}^{M-1})$ of length $3M$ $(2M)$.

REFERENCES

[1] N. Al-Dhahir and J. M. Cioffi, "Block transmission over dispersive channels: Transmit filter optimization and realization, and MMSE-DFE receiver performance," *IEEE Trans. Inform. Theory*, vol. 42, pp. 137–160, Jan. 1996.

[2] ——, "Mismatched finite-complexity mmse decision feedback equalizers," *IEEE Trans. Signal Processing*, vol. 45, pp. 935–944, Apr. 1997.

[3] ETSI Normalization Committee, "Channel models for HIPERLAN/2 in different indoor scenarios," European Telecommunications Standards Institute, Sophia-Antipolis, Valbonne, France, Norme ETSI 3ERI085B, 1998.

[4] A. Duel-Hallen, "A family of multiuser decision-feedback detectors for asynchronous code-division multiple-access channels," *IEEE Trans. Commun.*, vol. 43, pp. 421–434, Feb./Mar./Apr. 1995.

[5] A. Duel-Hallen, J. Holtzman, and Z. Zvonar, "Multiuser detection for CDMA systems," *IEEE Pers. Commun.*, pp. 46–58, Apr. 1995.

[6] G. K. Kaleh, "Channel equalization for block transmission systems," *IEEE J. Select. Areas Commun.*, vol. 13, pp. 110–121, Jan. 1995.

[7] R. A. Kennedy, B. D. O. Anderson, and R. R. Bitmead, "Tight bounds on the error probabilities of decision feedback equalizers," *IEEE Trans. Commun.*, vol. COM-35, pp. 1022–1028, Oct. 1987.

[8] J. Proakis, *Digital Communications*, 3rd ed. New York: McGraw-Hill, 1995.

[9] S. U. H. Qureshi, "Adaptive equalization," *Proc. IEEE*, vol. 73, pp. 1349–1387, Sept. 1985.

[10] A. Scaglione, G. B. Giannakis, and S. Barbarossa, "Redundant filterbank precoders and equalizers—Part I: Unification and optimal designs," *IEEE Trans. Signal Processing*, vol. 47, pp. 1988–2006, July 1999.

[11] ——, "Redundant filterbank precoders and equalizers—Part II: Blind channel estimation, synchronization and direct equalization," *IEEE Trans. Signal Processing*, vol. 47, pp. 2207–2022, July 1999.

[12] ——, "Minimum redundancy filterbank precoders for blind channel identification irrespective of channel nulls," in *Proc. 1999 IEEE Wireless Communications and Networking Conf.*, New Orleans, LA, Sept. 1999, pp. 785–789.

[13] J. Smee and C. Beaulieu, "Error-Rate evaluation of linear equalization and decision feedback equalization with error propagation," *IEEE Trans. Commun.*, vol. 46, pp. 656–665, May 1998.

[14] A. Stamoulis, W. Tang, and G. B. Giannakis, "Information rate maximizing FIR transceivers: Filterbank precoders and decision-feedback equalizers for block transmissions over dispersive channels," in *Proc. GLOBECOM'99*, Rio de Janeiro, Brazil, Dec. 1999, pp. 2142–2146.

[15] Y. Sun and L. Tong, "Channel equalization using one-tap DFE for wireless OFDM systems with ICI and ISI," in *Proc. 2nd IEEE SP Workshop on Signal Processing Advances in Wireless Communications*, Annapolis, MD, May 1999, pp. 146–149.

[16] L. Tong, D. Liu, and H. Zeng, "On blind decision-feedback equalization," in *Proc. 30th Asilomar Conf. Signals, Systems and Computers*, Pacific Grove, CA, Nov. 1996, pp. 305–309.

[17] S. Verdú, *Multiuser Detection*. Cambridge, U.K.: Cambridge Univ. Press, 1998.

[18] D. Williamson, R. A. Kennedy, and G. Pulford, "Block decision feedback equalization," *IEEE Trans. Commun.*, vol. 40, pp. 255–264, Feb. 1992.

[19] J. Yang and S. Roy, "Joint transmitter–receiver optimization for multi-input multi-output systems with decision feedback," *IEEE Trans. Inform. Theory*, vol. 40, pp. 1334–1347, Sept. 1994.

Anastasios Stamoulis was born in Athens, Greece, in 1972. He received the Diploma in computer engineering from the University of Patras, Patra, Greece, in 1995, and the Master's degree in computer science from the University of Virginia, Charlottesville, in 1997. Currently, he working toward the Ph.D. degree in the Department of Electrical and Computer Engineering, University of Minnesota, Minneapolis. His research interests include wireless and computer networks, digital communications, and digital signal processing for networking.

Georgios B. Giannakis (S'84–M'86–SM'91–F'97) received the Diploma in electrical engineering from the National Technical University of Athens, Athens, Greece, in 1981. From September 1982 to July 1986, he was with the University of Southern California (USC), Los Angeles, where he received the M.Sc. degree in electrical engineering in 1983, the M.Sc. degree in mathematics in 1986, and the Ph.D. degree in electrical engineering in 1986.

After lecturing for one year at USC, he joined the University of Virginia (UVA), Charlottesville, in 1987, where he became a Professor of Electrical Engineering in 1997, Graduate Committee Chair, and Director of the Communications, Controls, and Signal Processing Laboratory in 1998. Since January 1999, he has been with the University of Minnesota, Minneapolis, as a Professor of Electrical and Computer Engineering. His general interests lie in the areas of signal processing and communications, estimation and detection theory, time-series analysis, and system identification—subjects on which he has published more than 120 journal papers and 250 conference papers. Specific areas of expertise have included (poly)spectral analysis, wavelets, cyclostationary, and non-Gaussian signal processing with applications to sensor array and image processing. Current research focuses on transmitter and receiver diversity techniques for equalization of single-user and multiuser communication channels, mitigation of rapidly fading wireless channels, compensation of nonlinear amplifier effects, redundant filterbank transceivers for block transmissions, multicarrier, and wide-band communication systems.

Dr. Giannakis received the IEEE Signal Processing (SP) Society's 1992 Paper Award in the Statistical Signal and Array Processing (SSAP) area, and co-authored the 1999 Best Paper Award by Young Author (M. K. Tsatsanis). He co-organized the 1993 IEEE-SP Workshop on Higher-Order Statistics, the 1996 IEEE Workshop on Statistical Signal and Array Processing, and the first IEEE Workshop on SP Advances in Wireless Communications in 1997. He guest co-edited two special issues on high-order statistics (*International Journal of Adaptive Control and Signal Processing* and the EURASIP journal *Signal Processing*) and the January 1997 special issue on SP Advances in Communications of the IEEE TRANSACTIONS ON SIGNAL PROCESSING. He also edited the 50th anniversary article on Highlights of Signal Processing for *Communications* (March 1999) and the special issue on Advances in Wireless and Mobile Communications for *IEEE Signal Processing Magazine* (May 2000). He has served as an Associate Editor for the IEEE TRANSACTIONS ON SIGNAL PROCESSING and the IEEE SIGNAL PROCESSING LETTERS. He also served as a secretary of the SP Conference Board, a member of the SP Publications Board, and a member and vice-chair of the SSAP Technical Committee. He is a member of the editorial board for the PROCEEDINGS OF THE IEEE, he chairs the SP for Communications Technical Committee, and serves as Editor-in-Chief for the IEEE SIGNAL PROCESSING LETTERS. He is a Fellow of the IEEE, a member of the IEEE Fellows Election Committee, the IEEE-SP Society's Board of Governors, and a frequent consultant for the telecommunications industry.

Anna Scaglione (M'99) received the M.Sc. and Ph.D. degrees in electrical engineering from the University of Rome "La Sapienza," Rome, Italy, in 1995 and 1999, respectively.

During 1997, she visited the University of Virginia (UVA), Charlottesville, as a Research Assistant. She is currently a Postdoctoral Researcher at the University of Minnesota, Minneapolis. Her research interest include statistical signal processing and communication theory.